USER + INSTALLATION

> Instructions

Thule VeloSwing

Ducato / Jumper / Boxer > 2007
Movano > 2022 / Proace Max > 2024

302064

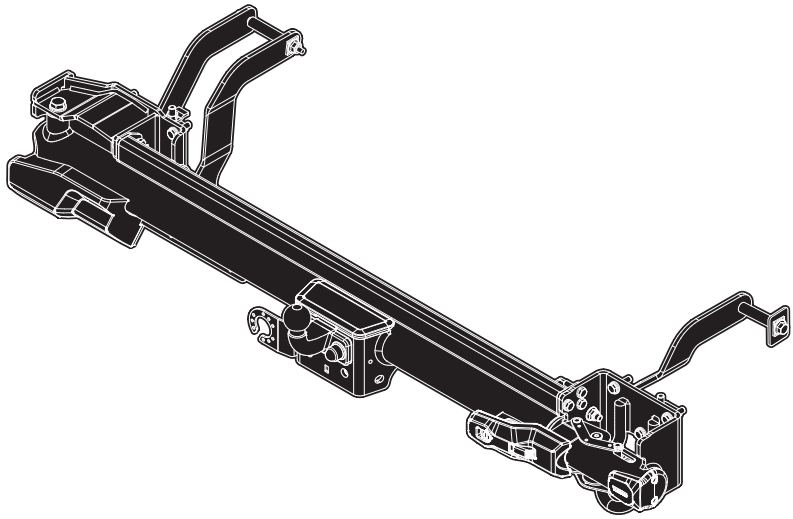

EBS900-07 | 3380074600
2025-05-26

Bring your life
thule.com

EN CHASSIS MOUNTED CARRIER – INSTRUCTIONS

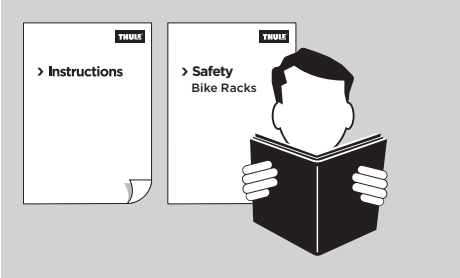

DE	Fahrgestellgepäckträger - Anleitung	**PL**	Bagażnik montowany na nadwoziu – instrukcje
NL	Op chassis gemonteerde drager - Instructies	**PT**	Suporte para montagem no chassis - instruções
FR	Porteurs montés sur châssis - Instructions	**CS**	Nosič na podvozek – pokyny
IT	Sistema di trasporto montato sullo chassis - istruzioni	**SL**	Nosilec za pritrditev na šasijo – navodila
ES	Soporte montado en el chasis - instrucciones	**TR**	Gövdeye bağlanan taşıyıcı – talimatlar
SV	Chassimonterad hållare – instruktioner	**ZH**	底盘安装式托架 - 说明
FI	Runkoon kiinnitetty laatikko – ohjeet	**JA**	シャーシマウント型キャリア - 取扱説明書
DA	Stelmonteret holder - instruktioner	**KO**	섀시 장착 캐리어 – 지침
NO	Chassismontert holder – instruksjoner		

1 WARNINGS & INFO 4

Warnungen & Infos / Waarschuwingen & info / Avertissements & informations / Avvertenze & informazioni / Advertencias & información / Varningar & information / Varoituksia & tietoja / Advarsler & info / Advarsler & information / Ostrzeżenia & informacje / Avisos e informações / Varování a informace / Opozorila in informacije / Uyarılar ve Bilgiler / 警告和信息 / 警告と情報 / 경고 및 정보

USER 21

2 OPEN 21

Öffnen / Openen / Ouvrir / Apri / Abrir / Öppna / Avaa / Åben / Åpne / Otwórz / Abrir / Otevřít / Odpreti / Açın / 打开（动词） / 開く（動詞） / 열기(동사)

3 CLOSE 24

Schließen / Sluiten / Fermer / Chiudi / Cerrar / Stänga / Sulje / Luk / Lukke / Zamknij / Fechar / Zavřít / Zapreti / Kapatın / 关闭（动词） / 閉じる（動詞） / 닫기(동사)

4 ACCESSORIES 27

Zubehör / Accessoires / Accessoires / Accessori / Accesorios / Tillbehör / Lisävarusteet / Tilbehør / Tilbehør / Akcesoria / Acessórios / Příslušenství / Dodatna oprema / Aksesuarlar / 配件 / アクセサリー / 액세서리

INSTALLATION 29

5 CONTENT 29

Inhalt / Inhoudsopgave / Sommaire / Contenuto / Contenido / Innehåll / Sisällys / Indhold / Innhold / Treść / Índice / Obsah / Kazalo / İçerik / 目录 / 目次 / 목차

6 TOOLS 33

Werkzeuge / Gereedschappen / Outils / Strumenti / Herramientas / Verktyg / Työkalut / Værktøj / Verktøy / Narzędzia / Ferramentas / Nářadí / Orodja / Aletler / 工具 / ツール / 도구

7 INSTALLATION 34

Montage / Installatie / Installation / Installazione / Instalación / Montering / Asennus / Montering / Montering / Montaż / Instalação / Montáž / Namestitev / Montaj / 安装 / 取り付け / 설치

1 WARNINGS & INFO

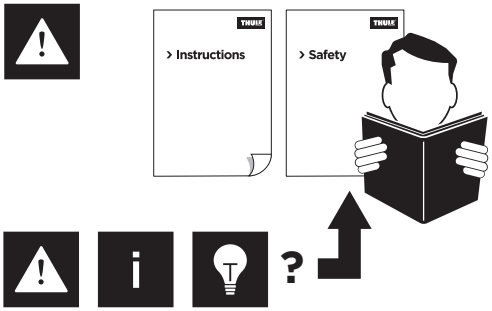

Thule VeloSwing - Installation video

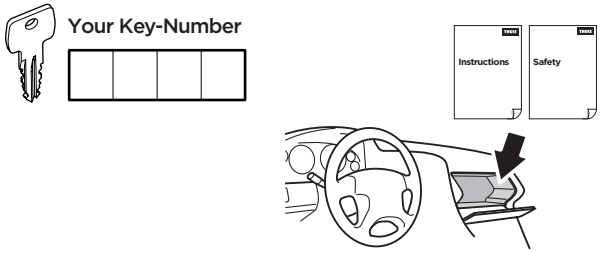

OK

NOT OK

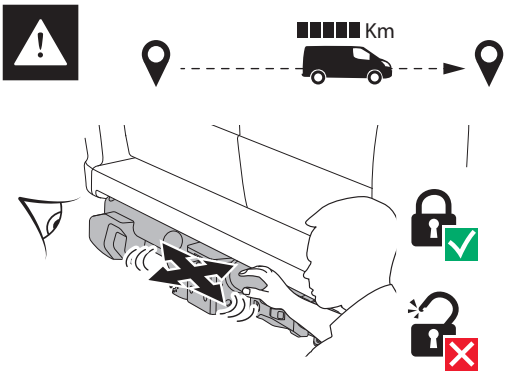
Km

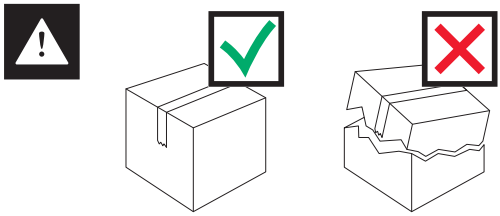

CHASSIS NUMBER

Fahrgestellnummer / Chassisnummer / N° de châssis / Numero di chassis / Número de chasis / Chassinummer / Runkonumero / Stelnummer / Karosserinummer / Numer nadwozia / Número do chassi / Číslo podvozku / Številka šasije / Gövde Numarası / 车架编号 / 車台番号 / 섀시 번호

OPTION 1

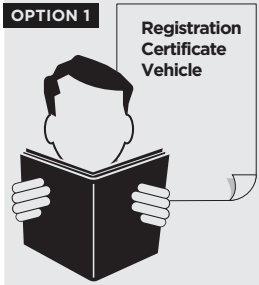

Zulassungsbescheinigung Fahrzeug
Registratiecertificaat voertuig
Certificat d'immatriculation du véhicule
Veicolo con certificato di registrazione
Certificado de registro de vehículo
Registreringsbevis för fordon
Ajoneuvon rekisteröintitodistus
Bilens registreringsnummer
Kjøretøysvognkort
Dowód rejestracyjny pojazdu
Certificado de registro do veículo
Vozidlo s registračním certifikátem
Potrdilo o registraciji vozila
Araç Tescil Belgesi
车辆注册认证
登錄認定車両
등록 인증 차량

OPTION 2

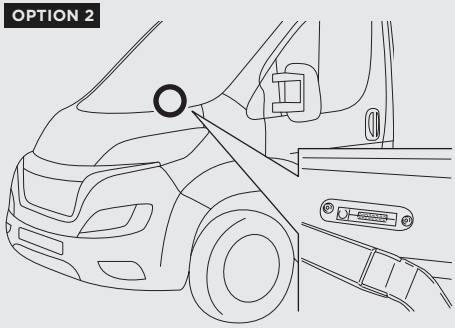

OPTION 3

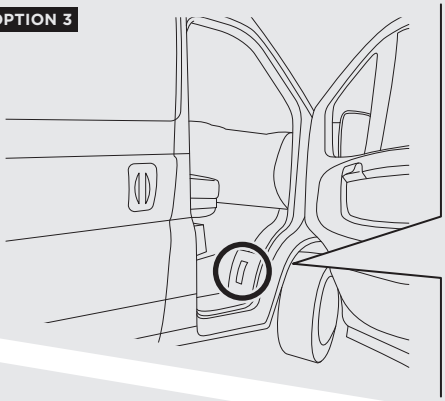

A

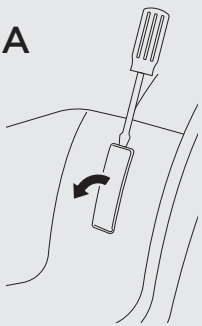

B

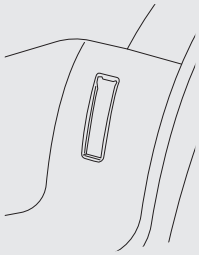

CHASSIS NUMBER

= ZFA2500000XXXXXXX
= VF3YDHMB6XXXXXXX
= VF7YDHMB6XXXXXXX

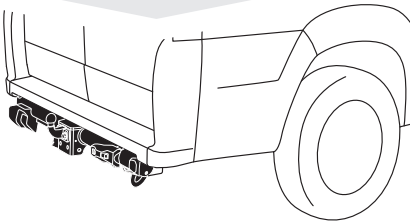

CHASSIS NUMBER

≠ ZFA2500000XXXXXXX
≠ VF3YDHMB6XXXXXXX
≠ VF7YDHMB6XXXXXXX

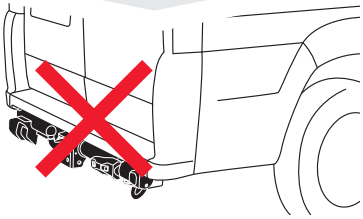

SMART KEY SENSOR

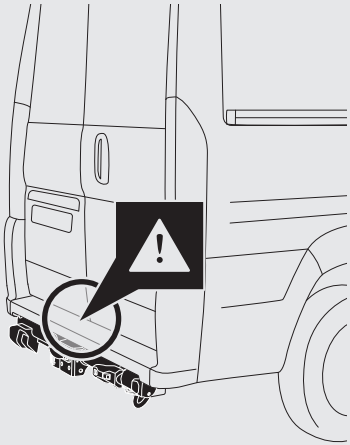

The Thule VeloSwing is not compatible with vehicles equipped with a Smart Key sensor.

Der Thule VeloSwing ist nicht kompatibel mit Fahrzeugen, die mit einem Smart-Key-Sensor ausgestattet sind. / De Thule VeloSwing is niet geschikt voor voertuigen die uitgerust zijn met een Smart Key-sensor. / Le Thule VeloSwing n'est pas compatible avec les véhicules équipés d'un capteur Smart Key. / Il Thule VeloSwing non è compatibile con i veicoli dotati di sensore Smart Key. / Thule VeloSwing no es compatible con vehículos que tengan un sensor de llave inteligente. / Thule VeloSwing är inte kompatibel med fordon som är försedda med en Smart Key-sensor. / Thule VeloSwing ei ole yhteensopiva älyavainanturilla varustettujen ajoneuvojen kanssa. / Thule VeloSwing er ikke kompatibel med køretøjer, der er udstyret med en Smart Key-sensor. / Thule VeloSwing er ikke kompatibel med kjøretøy som er utstyrt med SmartKey-sensor. / Thule VeloSwing nie jest kompatybilny z pojazdami wyposażonymi w czujnik Smart Key. / O Thule VeloSwing não é compatível com veículos equipados com um sensor Smart Key. / Thule VeloSwing není kompatibilní s vozidly vybavenými senzorem Smart Key. / Nosilec za kolesa Thule VeloSwing ni združljiv z vozili, opremljenimi s senzorjem za pametni ključ (Smart Key). / Thule VeloSwing, Akıllı Anahtar sensörüne sahip araçlarla uyumlu değildir. / Thule VeloSwing 与配⊠智能⊠匙⊠感器的⊠⊠不兼容。 / Thule VeloSwing は、Smart Key（スマートキー）センサーと互換していません。 / Thule VeloSwing은 스마트 키 센서가 있는 차량과 호환되지 않습니다.

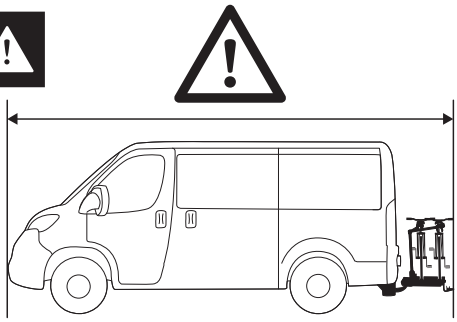

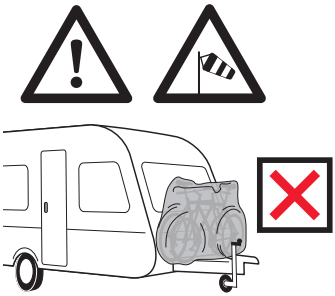

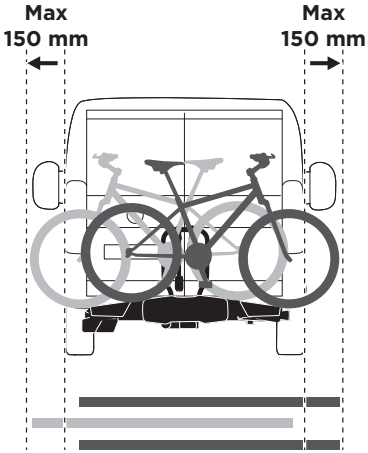

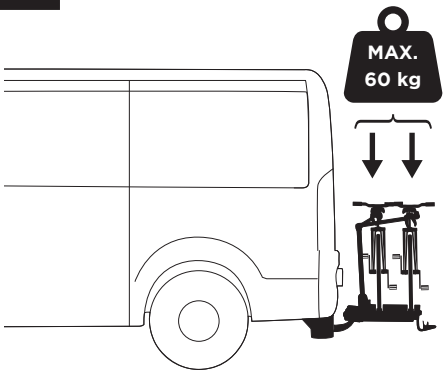

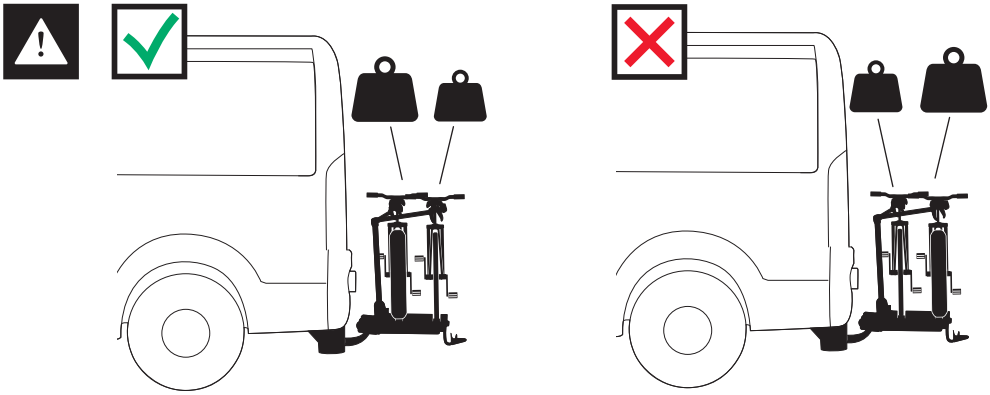

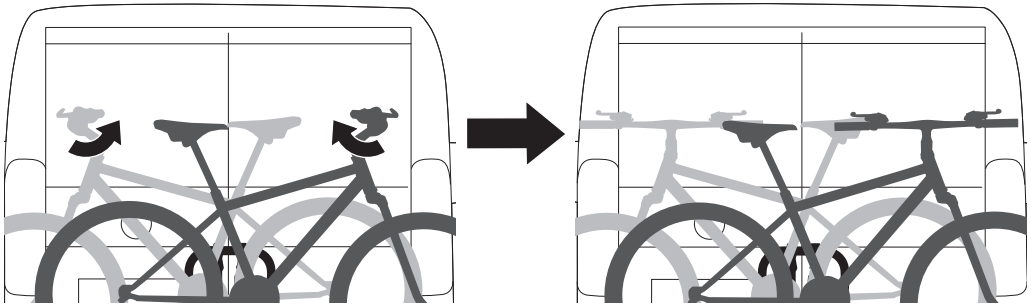

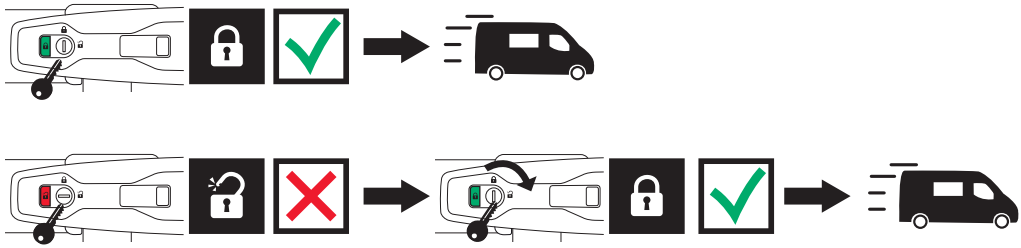

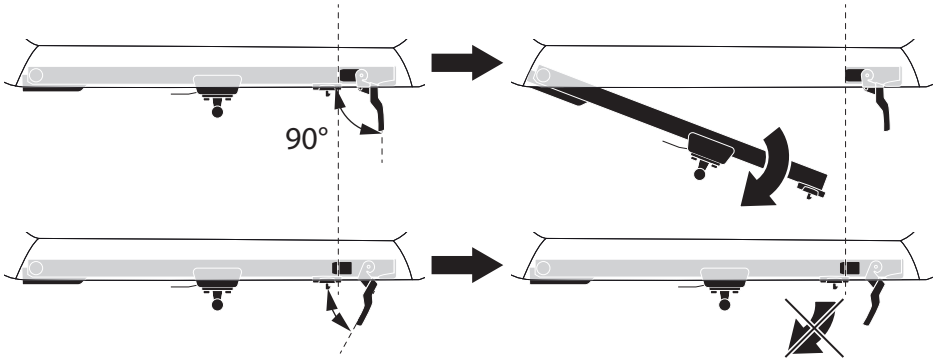
90°

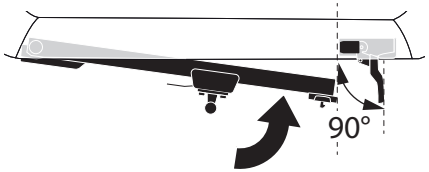
90°

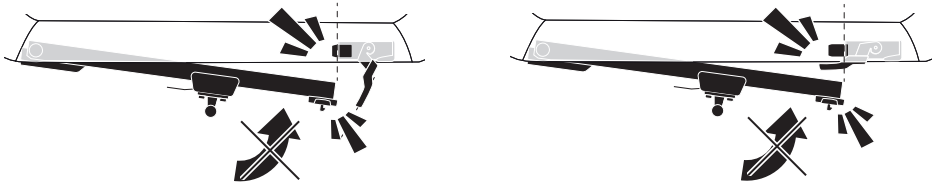

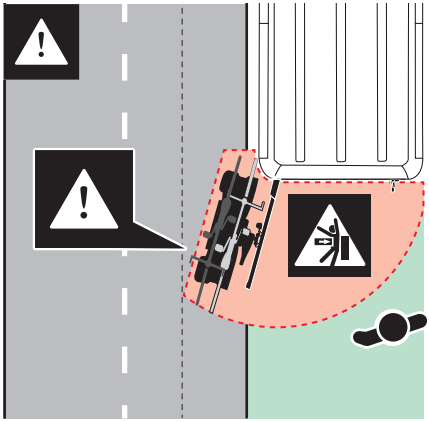

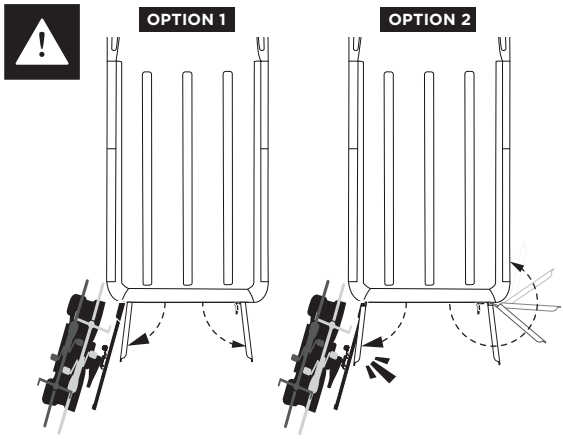
OPTION 1
OPTION 2

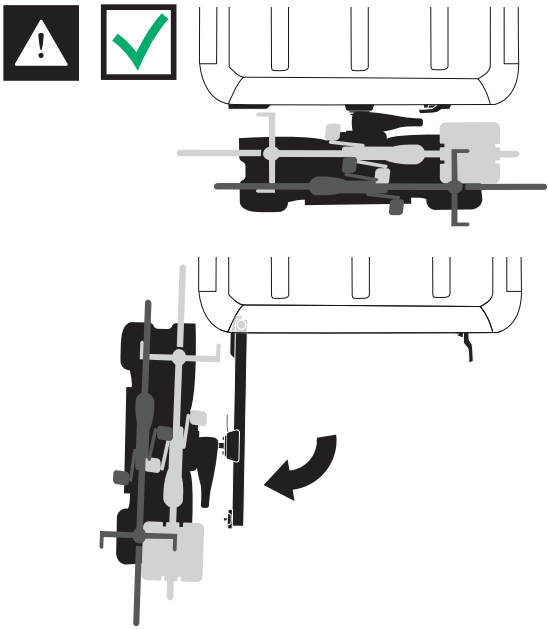

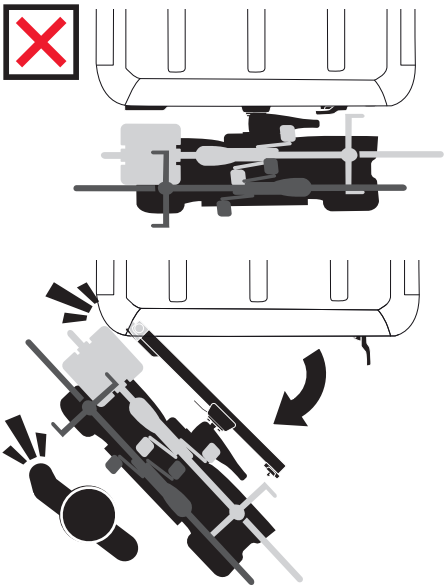

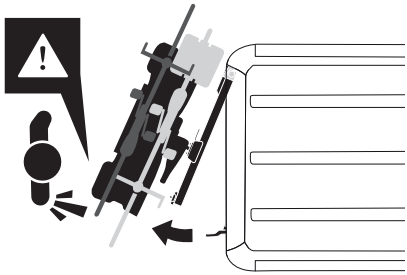

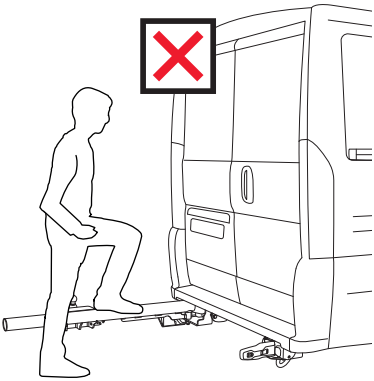

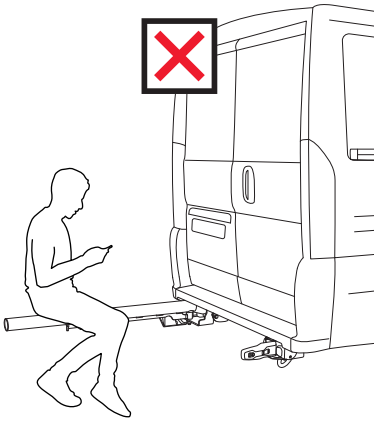

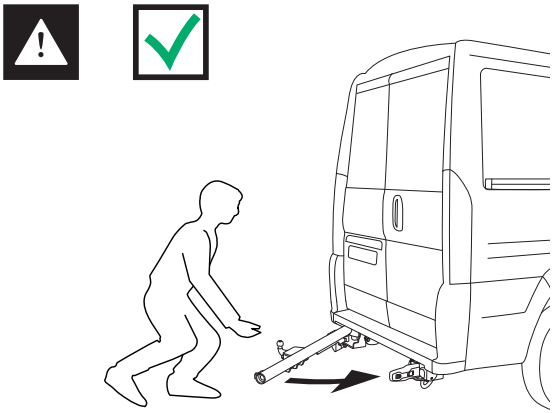

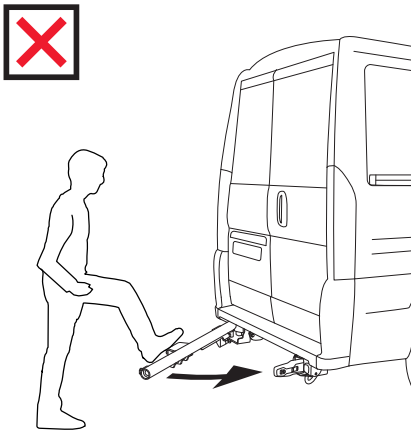

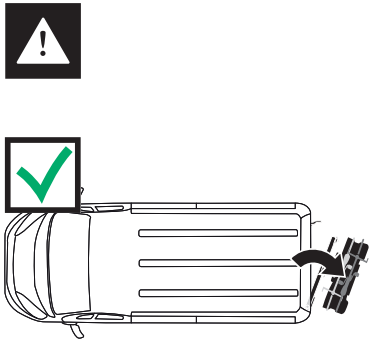

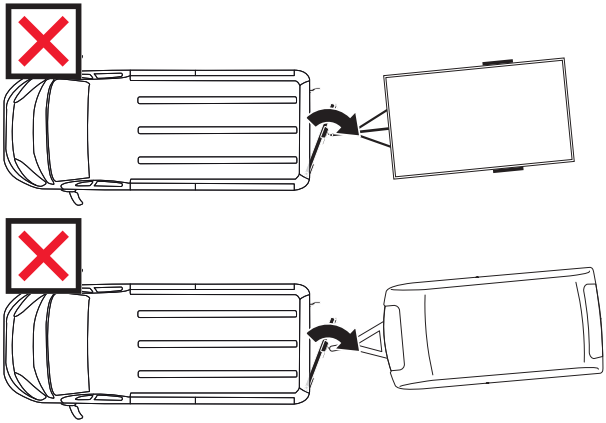

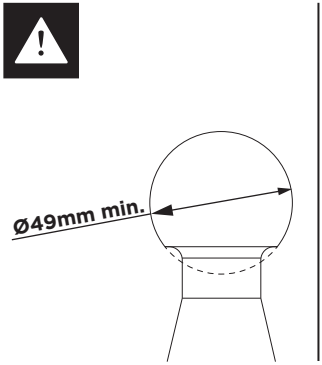
Ø49mm min.

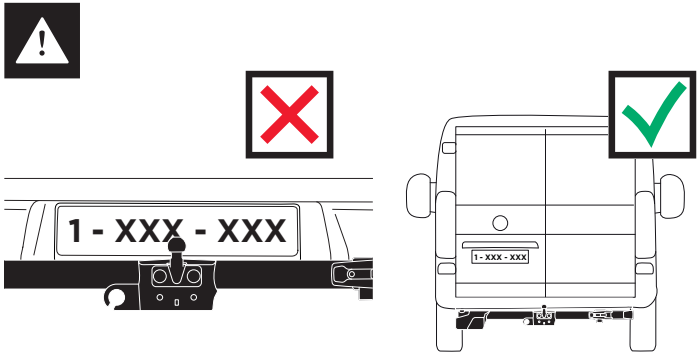
1 - XXX - XXX
1 - XXX - XXX

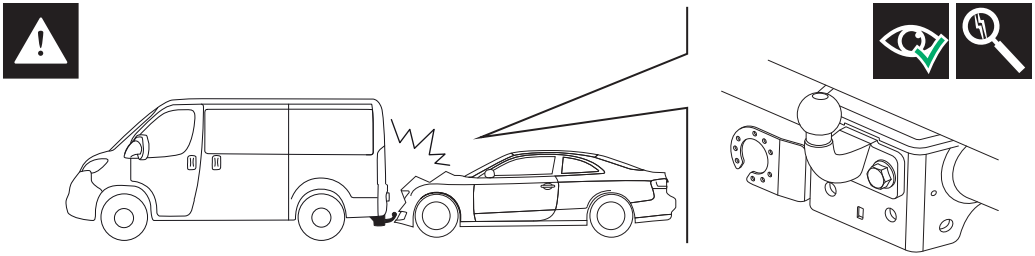

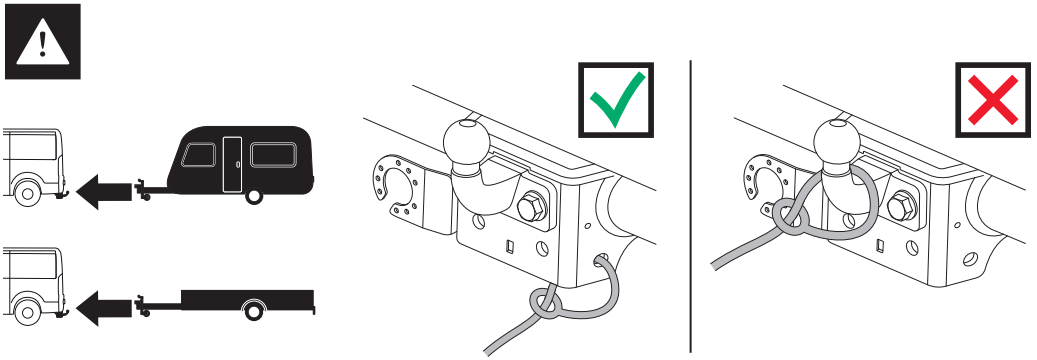

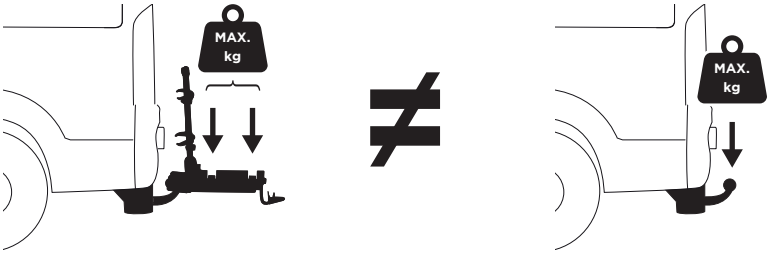

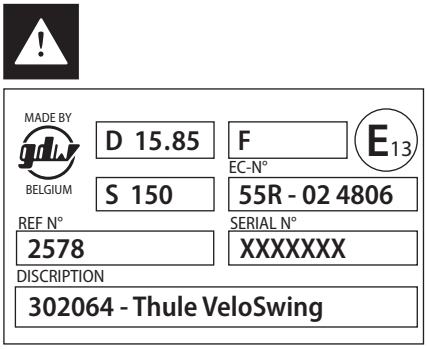

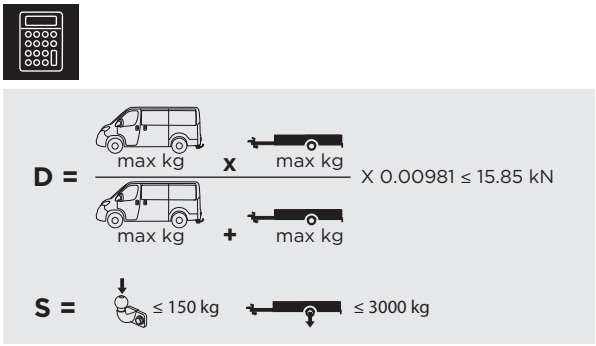

Certificate Of Conformity / Konformitätszertifikat / Certificaat van overeenstemming / Certificat de conformité / Certificato di conformità / Certificado de conformidad / Certifikat om överensstämmelse / Vaatimustenmukaisuustodistus / Certificate Of Conformity / Samsvarssertifikat / Deklaracja zgodności / Certificado de conformidade / Osvědčení o shodě / Potrdilo o skladnosti / Uygunluk Belgesi / CoC 符合性证书 / 適合証明書 / 적합성 인증

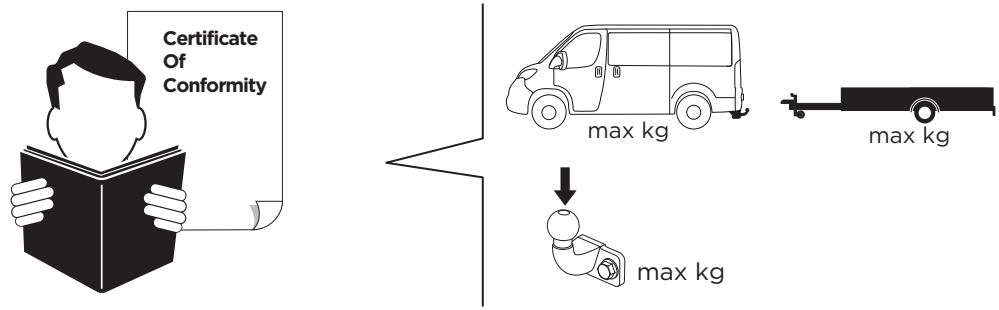

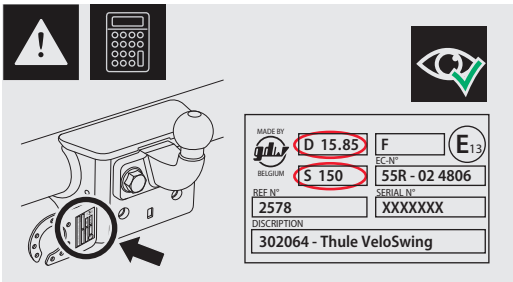

≥

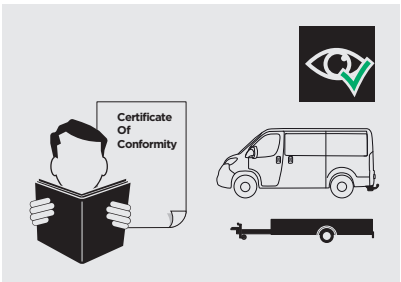

i

VEHICLE / * AUTOVEICOLO	CLASS / ** CLASSE E TIPO DI ATTACCO	CHASSIS NUMBER / NUMERO DI TELAIO	YEAR / ANNO
Adria	Twin sports/surpreme/ Active/plus	ZFA2500000XXXXXXX	2006+
Burstner	Eliseo C, Campeo C, City Car, Eliseo Active, Eliseo Limited, Campeo 4x4	ZFA2500000XXXXXXX	2006+
Capron	Carado CV600, CV640	VF3YDHMB6XXXXXXX	2016+
Capron	Carado CV540 PRO, CV600 PRO, CV600 PRO+, CV601 PRO, CV602 PRO, CV640 PRO, CV640 PRO+, V339, V540, V600	ZFA2500000XXXXXXX	2020+
Capron	Sunlight V60/V66/V65, Cliff	VF3YDHMB6XXXXXXX	2006+
Capron	Sunlight cliff, Cliff xx, cliff x, adventure Cliff	ZFA2500000XXXXXXX	2006+
Chausson	F&S, V690, V594M, V594, V594L, V594S, V697	ZFA2500000XXXXXXX	2006+
Citroën	Jumper	VF7YDHMB6XXXXXXX	2006+
Dangel	Ducato 4x4	ZFA2500000XXXXXXX	2006+
Dethelffs	Globetrail	ZFA2500000XXXXXXX	2006+
Dreamer	concord eh line	ZFA2500000XXXXXXX	2006+
Etrusco	CV-model Fiat/Plus/4x4	ZFA2500000XXXXXXX	2006+
Fiat	Ducato	ZFA2500000XXXXXXX	2006+
Font Vendome	Mondea, Rando Camp, Terravan, Leader camp, Duo van , leader camp duo, bel horizon	ZFA2500000XXXXXXX	2006+
Giottiline	54T, 60B, 60T	ZFA2500000XXXXXXX	2006+
Hymer	Camper vans, Free campus	ZFA2500000XXXXXXX	2006+

VEHICLE / * AUTOVEICOLO	CLASS / ** CLASSE E TIPO DI ATTACCO	CHASSIS NUMBER / NUMERO DI TELAIO	YEAR / ANNO
Karmann Mobil	Dexter	ZFA2500000XXXXXXX	2015+
Knaus	BoxStar, Boxlife	ZFA2500000XXXXXXX	2006+
Laika	Kosmo camper van, ecovip camper van	ZFA2500000XXXXXXX	2020+
McLouis	Menfys s-line/Prestige, 7LifeStyle	ZFA2500000XXXXXXX	2006+
Opel	Movano	ZFA2500000XXXXXXX	2022+
Peugeot	Boxer	VF3YDHMB6XXXXXXX	2006+
Pössl	Plus, H-line, Summit, Tentra, D-line	ZFA2500000XXXXXXX	2006+
Rapido	V-series	ZFA2500000XXXXXXX	2006+
Rimor	Horus	ZFA2500000XXXXXXX	2006+
Sun Living	V-series, V Family	ZFA2500000XXXXXXX	2006+
Toyota	Proace (basis)	ZFA2500000XXXXXXX	2020+
Trigano	X-Van, Tribute, Roller team livingstone, CI Kyros	ZFA2500000XXXXXXX	2020+
Weinsberg	Carabus, CaraTour, X-cursion Van	ZFA2500000XXXXXXX	2006+
Westfalia	Amundsen	ZFA2500000XXXXXXX	2006+
Westfalia	Columbus	ZFA2500000XXXXXXX	2006+
Challenger	F&s, V114S, V114, V114L, V114M, V210, V217	ZFA2500000XXXXXXX	2006+
Other	...	ZFA2500000XXXXXXX VF3YDHMB6XXXXXXX VF7YDHMB6XXXXXXX	...

DICHIARAZIONE DI CORRETTO MONTAGGIO

DECLARATION OF CORRECT INSTALLATION

La sottoscritta ditta dichiara di aver montato in maniera corretta il dispositivo di traino di cui sotto, **seguendo le prescrizioni del costruttore del veicolo e del costruttore del dispositivo**

The undersigned company declares to have correctly mounted the towing device mentioned below, **following the prescriptions of the vehicle manufacturer and the construction manufacturer.**

COSTRUTTORE	*MANUFACTURER*	**GDW N.V.**
RIFERIMENTO	*REFERENCE*	**2578**
AUTOVEICOLO	*VEHICLE*	*
CLASSE E TIPO DI ATTACO	*CLASS*	**
APPROVAZIONE	*HOMOLOGATION*	**E13*55R02/02*4806*02**
VALORE D	*D VALUE*	**15.85 kN**

Timbro e firma dell'installatore

Stamp & signature of installer

DATA .....

DATE

MASSA RIMORCHIABILE	*TOWABLE MASS*	**Vedere carta circolazione del veicolo** See registration certificate of vehicle
CARICO VERTICALE MAX. S	*MAX. VERTICAL LOAD S*	**150 kg**

NOTA ESPLICATIVA

EXPLANATORY NOTE

Per facilitare il controllo della compatibilità del dispositivo di traino sul veicolo, è opportuno confrontare le masse riportate sulla carta di circolazione del veicolo con le masse di riferimento sotto riportate (**T** ed **C**):

*To simplify checking the compatibility of the towing device on the vehicle, it is advisable to compare the masses shown on the vehicle registration certificate with the reference masses shown below (**T** and **C**):*

T = Massa complessiva del veicolo in kg — Total vehicle mass in kg

C = Massa rimorchiabile del veicolo in kg — Towable mass of the vehicle in kg

Massa complessiva del veicolo, desunta dalla carta di circolazione (**F2**) in kg .....

*Total mass of the vehicle, taken from the registration certificate (**F2**)*

deve essere inferiore od uguale a quella di riferimento **T** (= ..... kg)

*must be less than or equal to the reference **T***

Massa rimorchiabile del veicolo, desunta dalla carta di circolazione (**O1**) in kg .....

*Towable mass of the vehicle, taken from the registration certificate (**01**)*

deve essere inferiore od uguale a quella di riferimento **C** (= ..... kg)

*must be less than or equal to the reference **C***

Se tali condizioni sono verificate il dispsitivo **è installabile** *If these conditions are met, the device **can be installed***

Se tali condizioni non si verificano, si deve procedere al sefuente calcolo:

If these conditions are not met, the following calculation must be made:

$$\mathbf{D} = \frac{T \times C}{T + C} \times 0{,}00981 = \ldots\ldots \text{ kN}$$

Se **D** risulta inferiore a **15.85 kN** (valore riportato sulla targhetta e sul presente documento) il dispositivo **può essere installato**

*If **D** is less than* *(value shown on the plate and on this document)* ***the device can be installed***

EN The clearance specified in diagram of regulation R55 UN/ECE must be guaranteed.

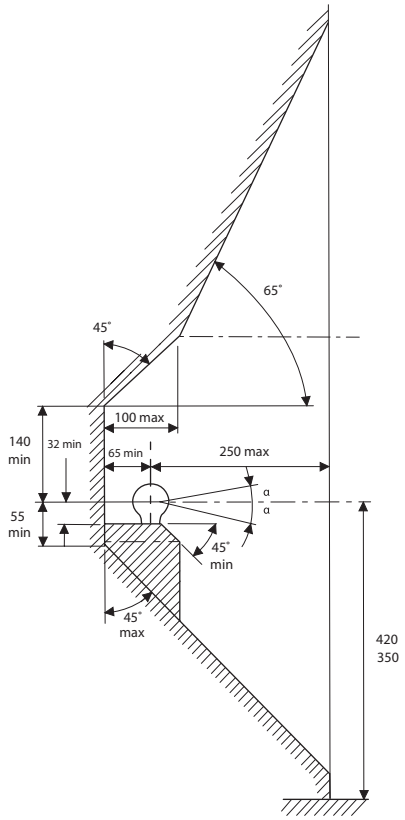

DE Der im Diagramm der Regelung R55 UN/ECE angegebene Freiraum muss gewährleistet sein.

NL De goedkeuring gespecificeerd in het diagram in reglement R55 VN/ECE moet worden gewaarborgd.

FR L'espace spécifié dans le schéma du règlement ECE R55 doit être garanti.

IT Lo spazio specificato nel digramma della norma R55 UN/ECE deve essere garantito.

ES Debe garantizarse el espacio especificado en el diagrama de la norma R55 UN/ECE.

SV Frigången som specificeras i diagrammet för direktiv R55 UN/ECE måste garanteras

FI Määräyksen R55 UN/ECE kaaviossa määritetty välys on taattava.

DA Godkendelsen, specificeret i skema over forordning nr. R55 UN/ECE, skal garanteres

NO Avstanden spesifisert i diagrammet til regulering R55 UN/ECE må oppfylles

PL Musi być zapewniony prześwit określony w schemacie Regulaminu Europejskiej Komisji Gospodarczej Organizacji Narodów Zjednoczonych (EKG ONZ)

PT O afastamento especificado no diagrama de regulamentação R55 UN/ECE deve ser garantido

CS Musí být zajištěna vůle uvedená ve schématu předpisu R55 EHK/OSN

SL Prostor, naveden v diagramu uredbe R55 UN/ECE, mora biti zajamčen

TR AB/AEK R55 yönetmeliğindeki şemada belirtilen boşluk garanti edilmelidir

ZH 必须保证 R55 UN/ECE 规定的图表中指明的间距

JA 規制R55 UN/ECEの図で指定されているクリアランスが保証される必要があります

KR 규정 R55 UN/ECE의 도표에 명시된 여유 공간이 보장되어야 합니다

EN At permissible total weight of the vehicle

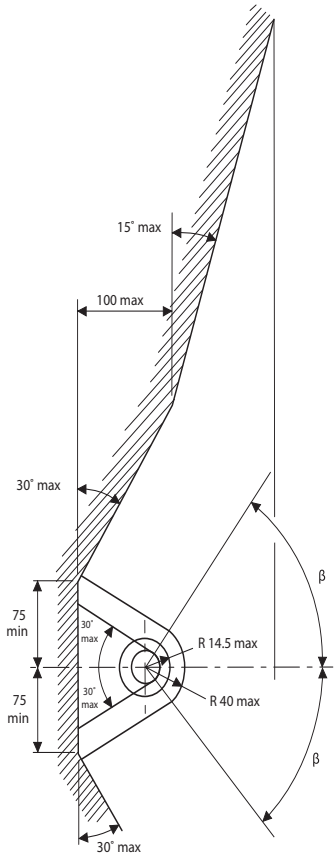

DE Bei zulässigem Gesamtgewicht des Fahrzeugs

NL Bij het totale toegestane gewicht van het voertuig

FR Au poids total autorisé du véhicule

IT Al peso totale consentito del veicolo

ES Con el peso total permisible del vehículo

SV Vid tillåten totalvikt för fordonet

FI Ajoneuvon suurimmalla sallitulla kokonaispainolla

DA Ved bilens totale tilladelige vægt

NO Ved tillatt totalvekt av kjøretøyet

PL Przy dopuszczalnej masie całkowitej pojazdu

PT No peso permissível total do veículo

CS Při přípustné celkové hmotnosti vozidla

SL Pri dovoljeni skupni masi vozila

TR Aracın izin verilen toplam ağırlığında

ZH 达到车辆许可最大载重

JA 車両の許容総重量において

KR 차량 총 허용 중량 수준

EN Space for towing point

DE Platz für Kupplungspunkt
NL Ruimte voor de koppelkogel
FR Espace pour le point de remorquage
IT Spazio per il punto di traino
ES Espacio para punto de remolcado
SV Utrymme för bogseringspunkt
FI Hinauspisteen tila
DA Plads til slæbepunkter
NO Plass til slepepunkt
PL Miejsce na punkt/zaczep holowniczy
PT Espaço para ponto de reboque
CS Prostor pro tažné místo
SL Prostor za vlečno točko
TR Çekme noktası için alan
ZH 牵引点的空间
JA 牽引ポイント用スペース
KR 견인 위치에 해당하는 공간

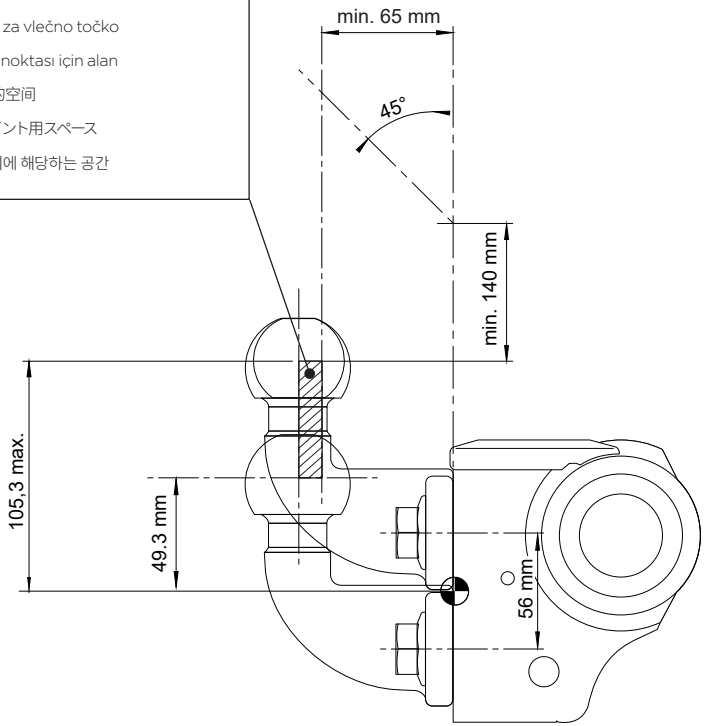

USER

2 OPEN

1

A

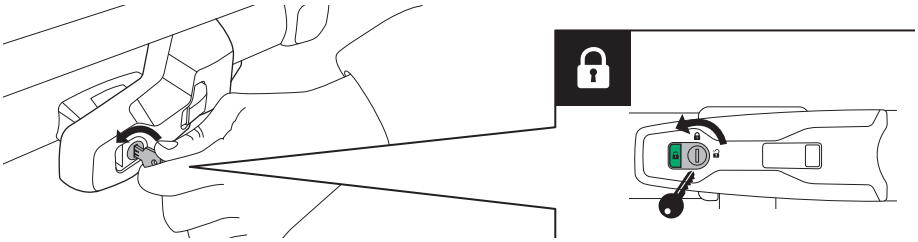

B

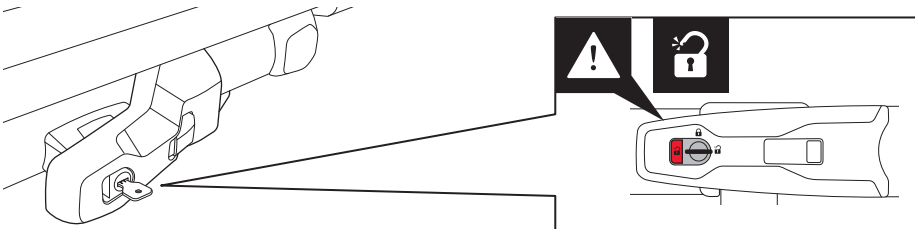

C

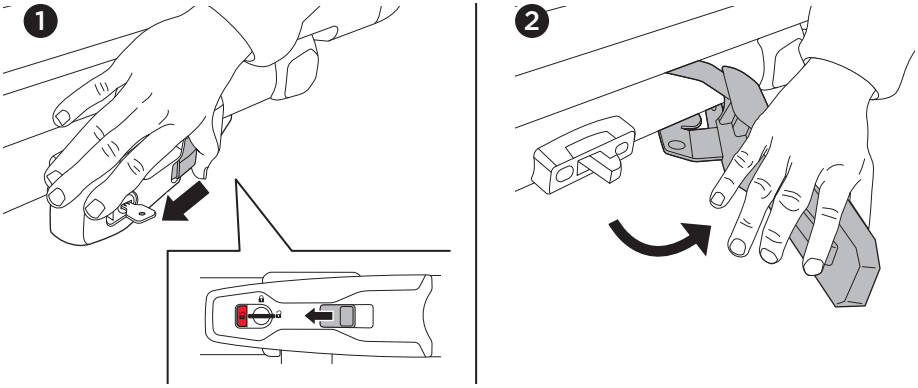

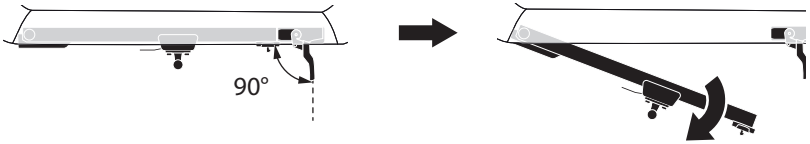

2

A

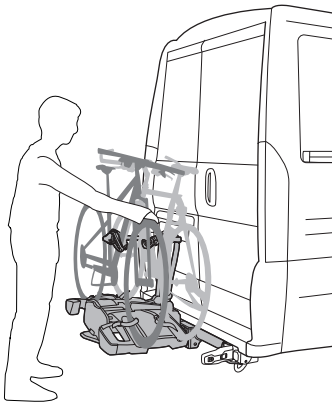

B

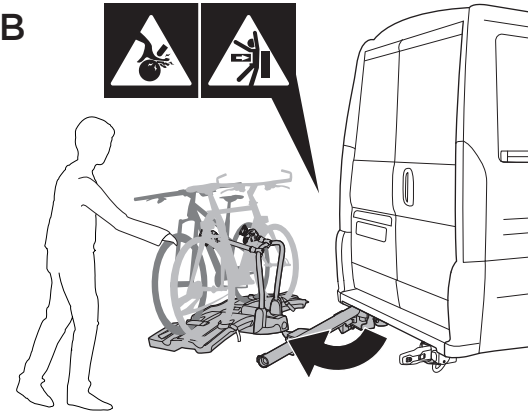

C

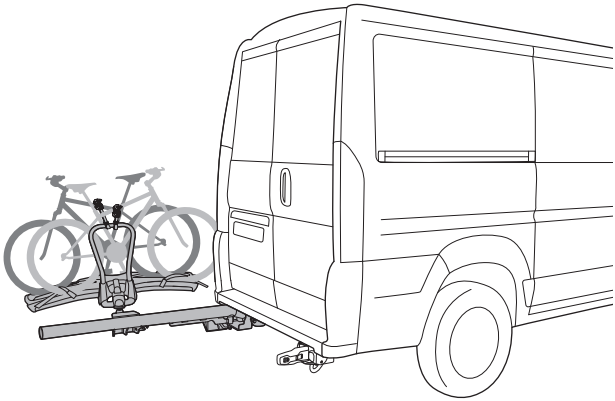

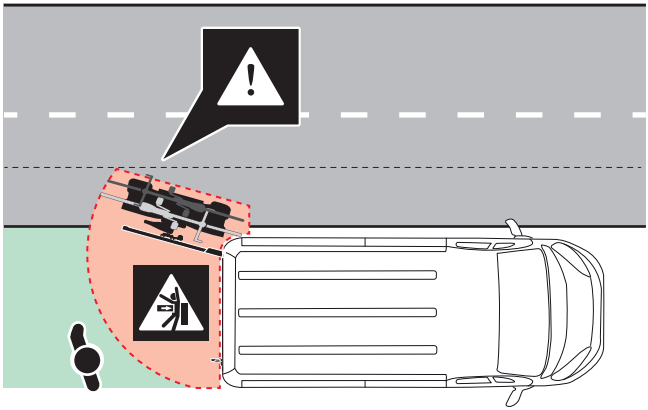

3

A

B

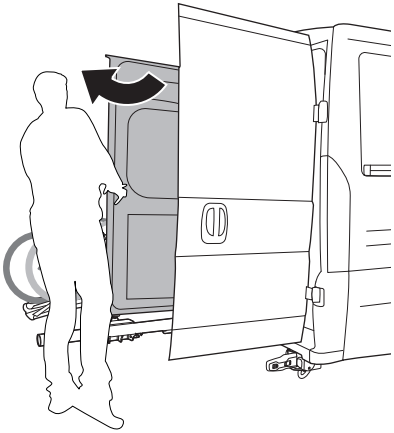

C

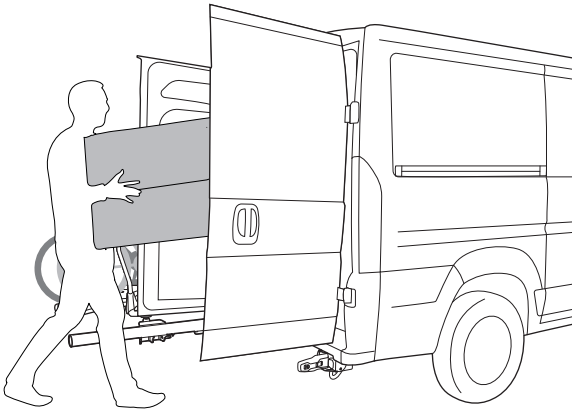

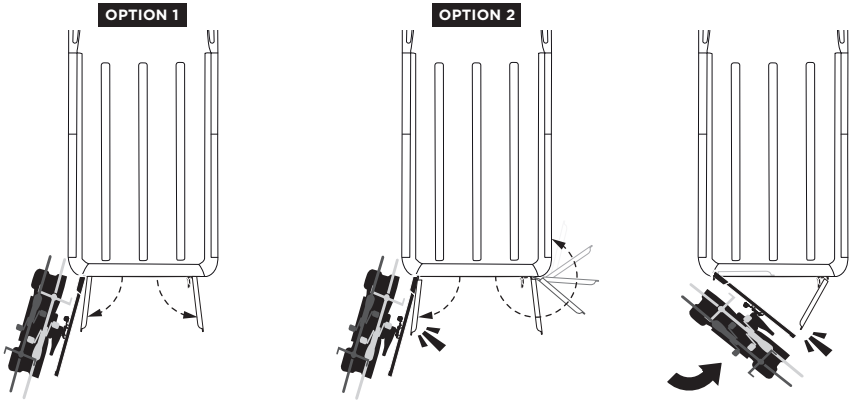

3 CLOSE

1

A

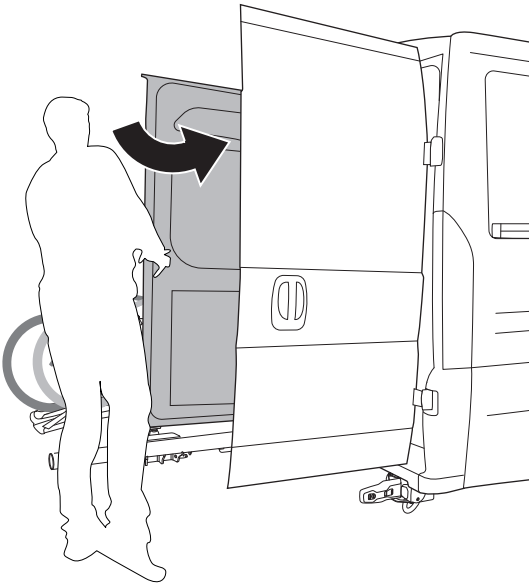

B

2

A

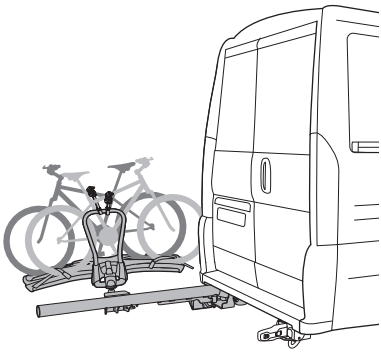

B

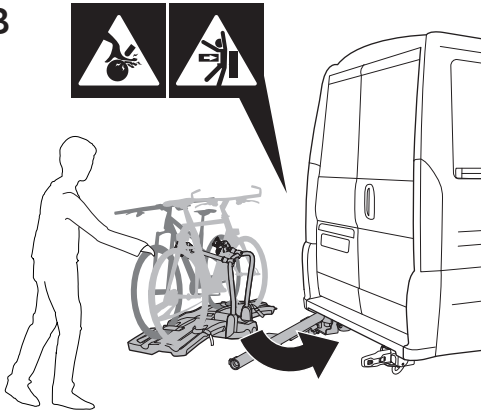

C

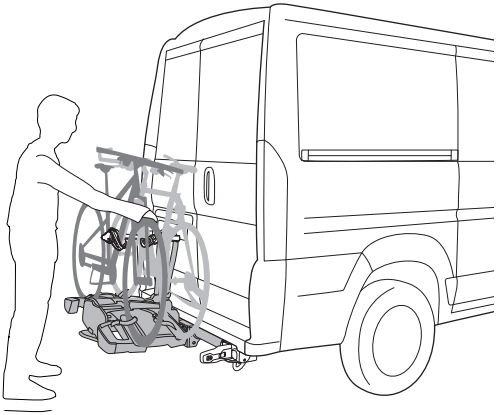

3

A

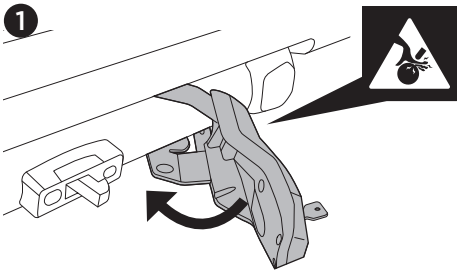

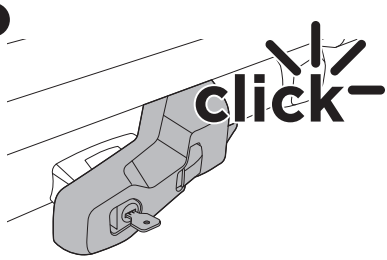

B

C

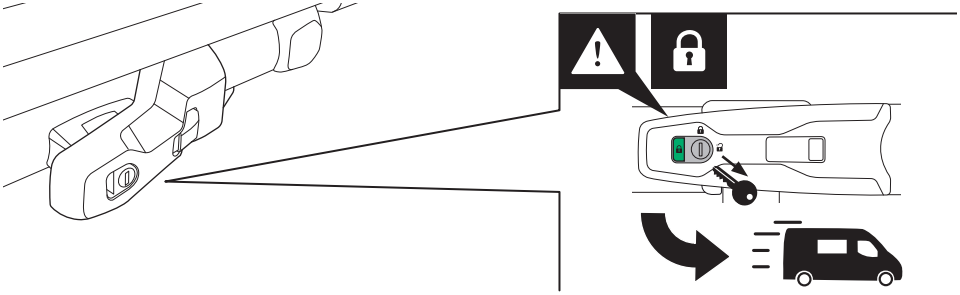

i

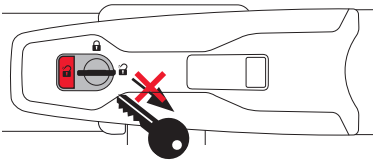

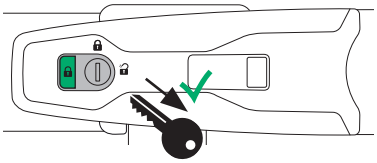

4 ACCESSORIES

Pre-cut Bumper (without sensors) 302065

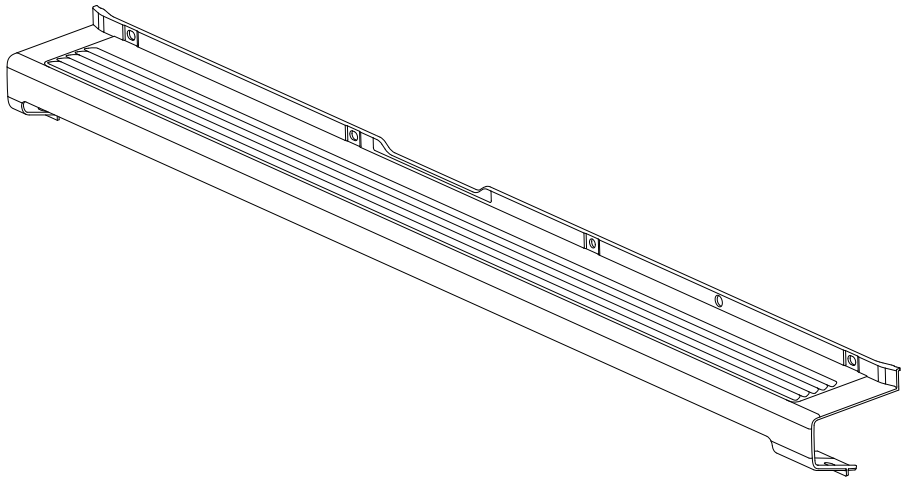

Pre-cut Bumper (for sensors) 302066

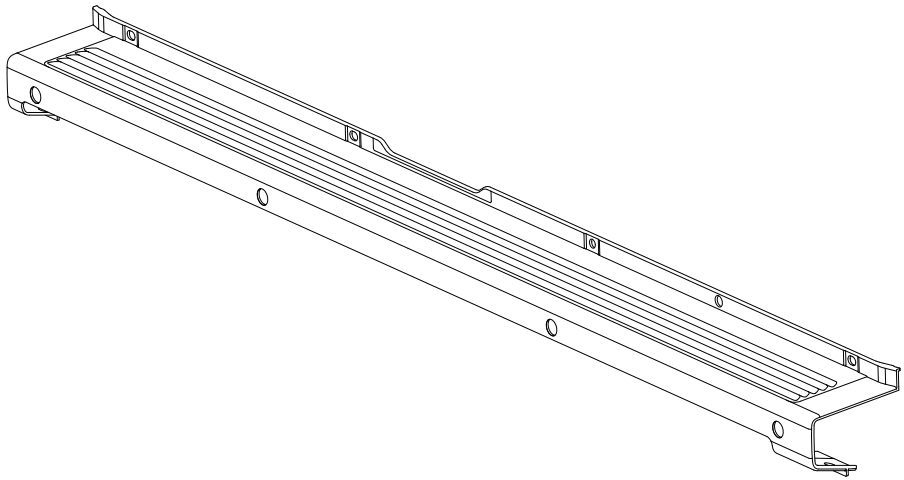

Thule Adapter 13-to-7 9907

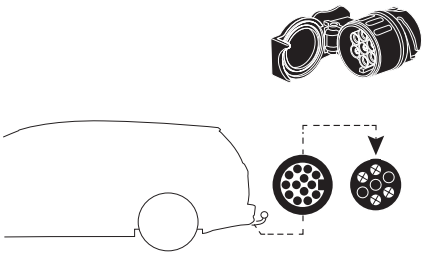

302075 - Thule VeloSwing Wiring Kit > 2011

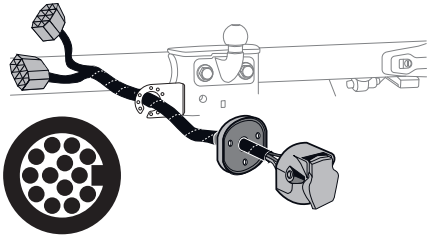

302076 - Thule VeloSwing Wiring Kit < 2011

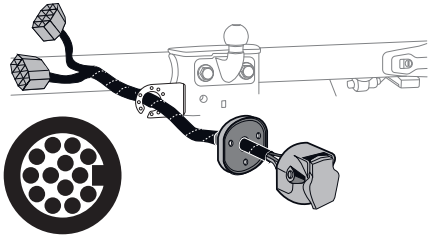

INSTALLATION

WARNINGS & INFO

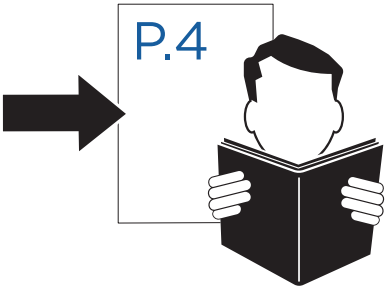

5 CONTENT

VELOSWING

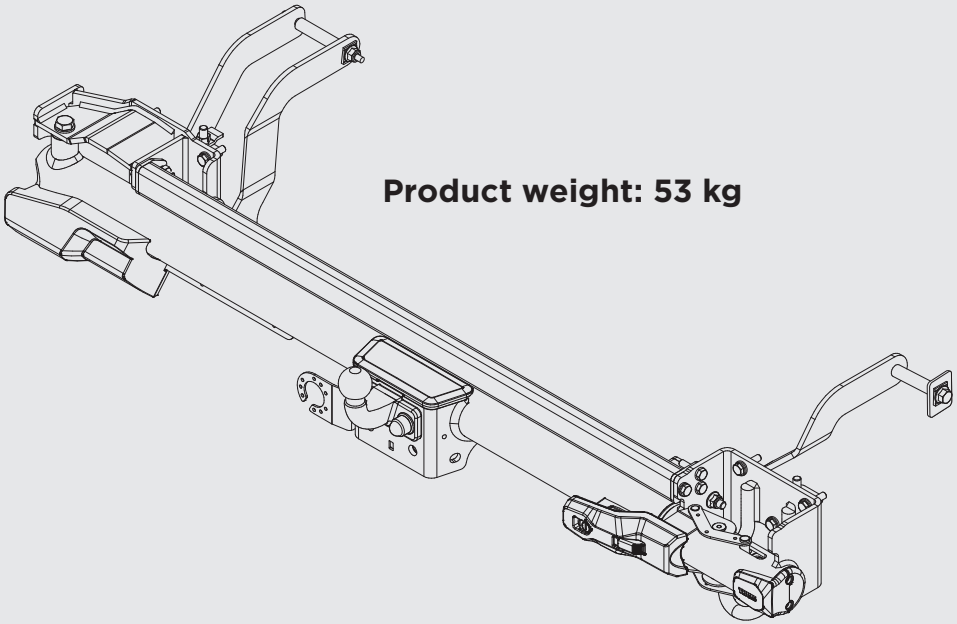

Product weight: 53 kg

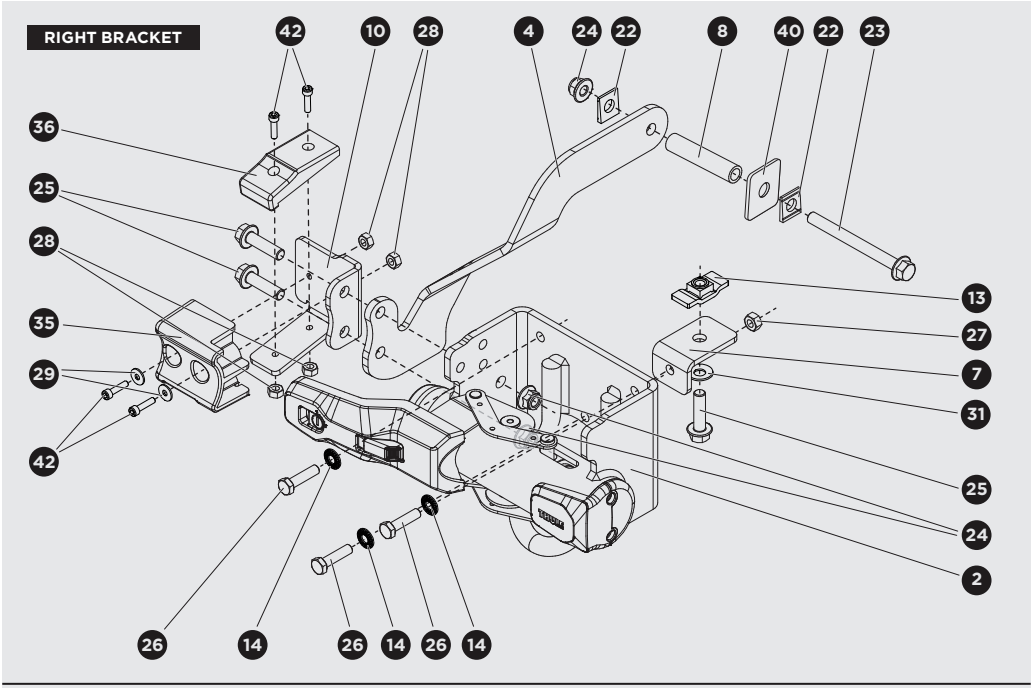
RIGHT BRACKET
42
10
28
4
24
22
8
40
22
23
36
25
28
35
29
42
13
27
7
31
25
24
2
26
14
26
14
26
14

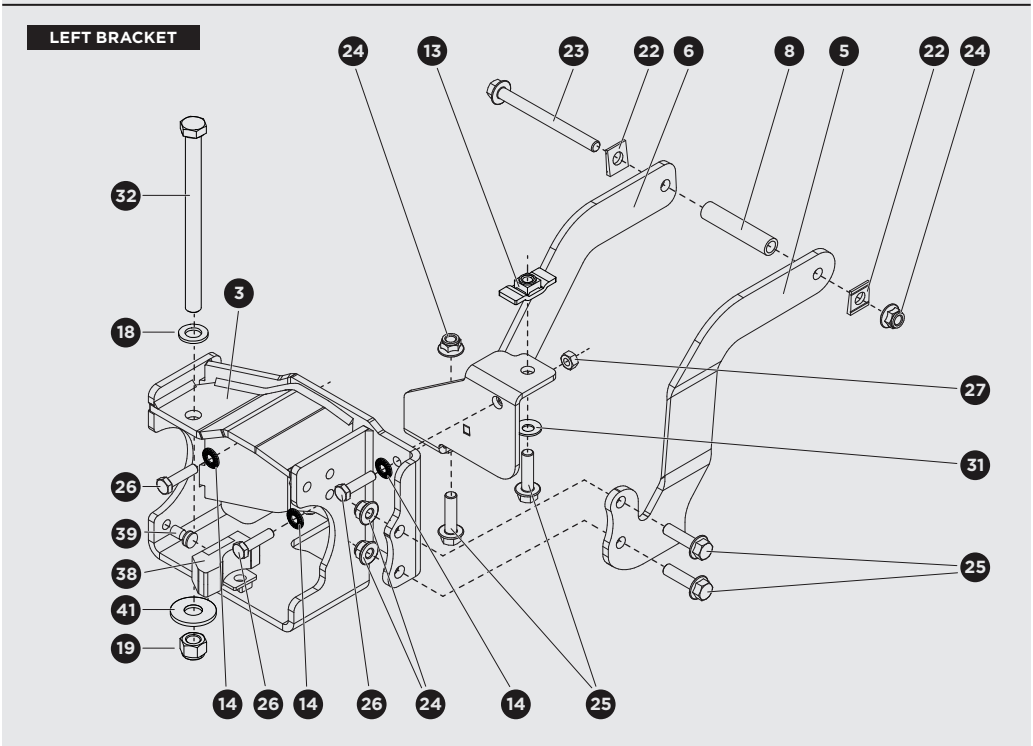
LEFT BRACKET
24
13
23
22
6
8
5
22
24
32
3
18
27
31
26
39
38
41
19
25
14
26
14
26
24
14
25

CENTER BRACKET

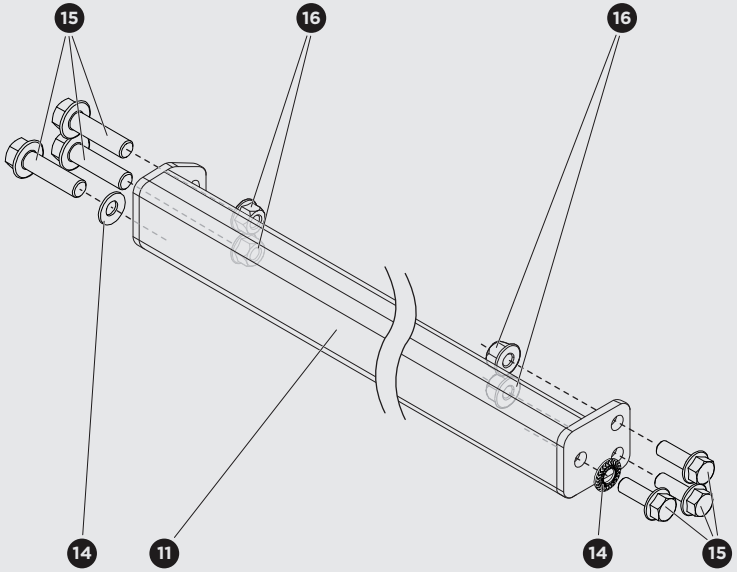

BEAM

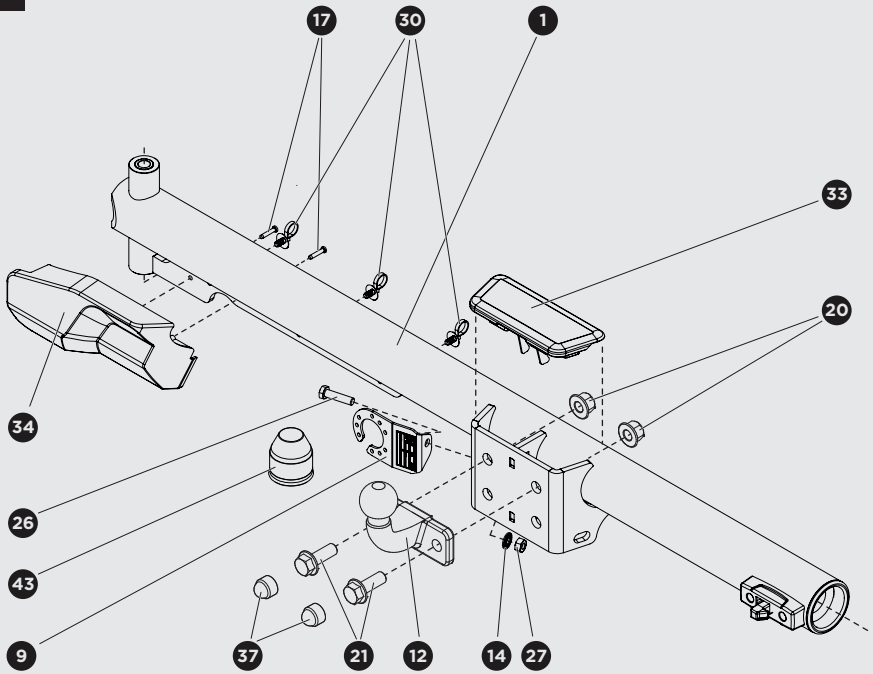

ID	PART N°	DESCRIPTION	QUANTITY
1	2578-010	Main beam	1
2	2578-030	Bracket R	1
3	2578-040	Bracket L	1
4	2578-070	Mounting part R	1
5	2578-071	Mounting part L	1
6	2578-080	Mounting part L2	1
7	2578-120	Mounting part R	1
8	2578-140	Chassis spacer	2
9	2578-160	Socket plate	1
10	2578-170	Beam support	1
11	2578-180	Torsion tube	1
12	740.000	Tow ball 740.000 (90 mm)	1
13	902.005	Chassis nut M12x1.5	2
14	730.11.10	SKSM M10 ZnF	9
15	728.59.10030	MBN10105-M10x30 - 10.9 - ZnF	6
16	729.54.10	MBN13023-M10x1.5-KL10-ZnF	4
17	749.17.05025	Plastic screw 5x25 - A2	2
18	730.21.16	ISO7089-M16-ZnF	1
19	729.74.16	DIN985-M16-ZnF	1
20	729.54.16	MBN13023 M16x1.5 KL10 -ZnF	2
21	728.59.16045	MBN10105 M16x45 1.5-10.9-ZnF	2
22	749.13.12	DIN434-M12 - Square beveled washer - A2	4
23	728.59.12140	MBN10105 M12x140 1.5-10.9-ZnF	2
24	729.54.12	MBN13023-M12x1.5-KL10-ZF	7
25	728.59.12045	MBN10105 M12x45 1.5-10.9-ZnF	7
26	728.31.10040	ISO8676 M10x40 - 1.25-8.8 ZnF	7
27	729.17.10	DIN934-M10-1,25	3
28	732.070.06	DIN985-M6 - A2	4
29	733.00.06	DIN9021-M6 - A2	2
30	718.19.150050	Cable tie with rivet (150x5 - Ø6,5)	3
31	730.11.12	SKSM M12 - ZnF	2
32	728.04.16220	ISO4014-M16x220-10.9-ZnF	1
33	718.16.100	Cover - towball bracket	1
34	718.16.101	Cover - beam	1
35	718.16.102	Beam receiver bumper	1
36	718.16.103	Beam ramp	1
37	718.08.016	Nut cap M16	2
38	918.100	Adjust	1
39	911.110	Adjust Axle	1
40	2578-210	Square washer	1
41	730.01.16	Washer M16 7093 Znf 720	1
42	730.00.06020	ISO 4762 M6x20 A2/70	4
43	740 203	Towbar ball cover Ø50 mm	1

6 TOOLS

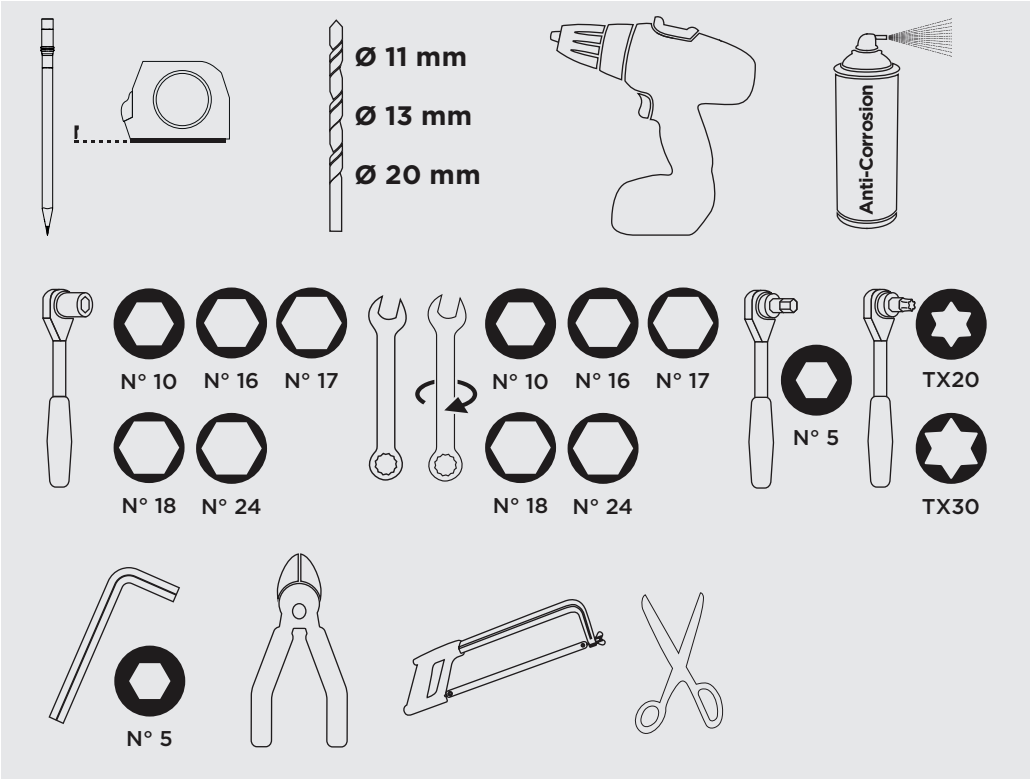

		M6	M8	M10		M12			M14		M16	
		1	1,25	1,5	(1,25)	1,75	(1,5)	(1,25)	1,75	(1,5)	2	(1,5)
Material Strength	8.8	10 Nm	24,0 Nm	48 Nm	51 Nm	84 Nm	87 Nm	90 Nm	133 Nm	142 Nm	206 Nm	218 Nm
	10.9	15 Nm	36,0 Nm	71 Nm	75 Nm	123 Nm	125 Nm	133 Nm	195 Nm	209 Nm	302 Nm	320 Nm

7 INSTALLATION

1

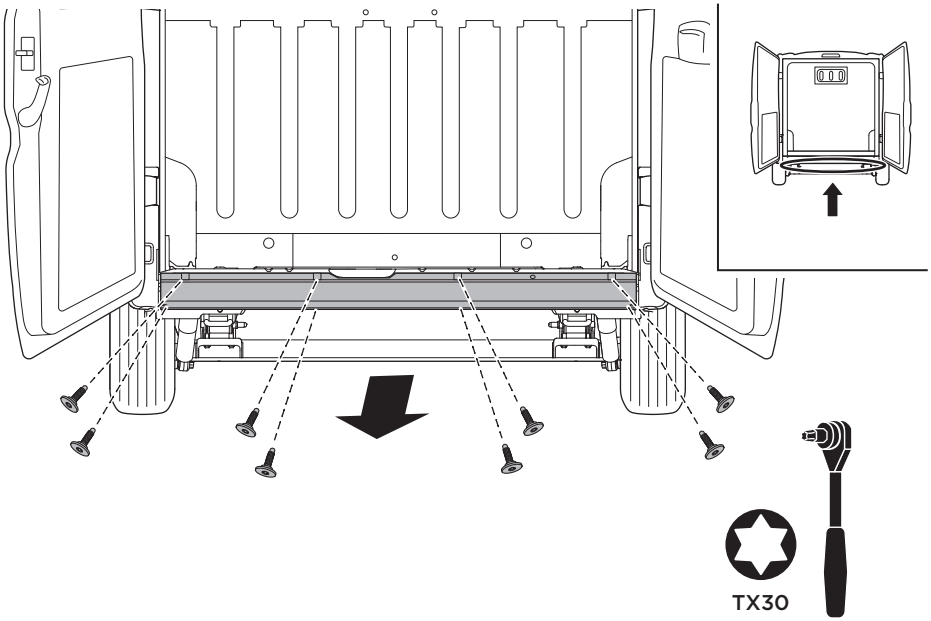

SCREWS	ORIGINAL BUMPER	ORIGINAL BUMPER
	OPTION 1	**OPTION 2**
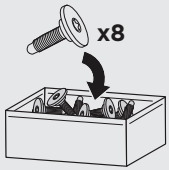	**DIY-cut Bumper**	**Pre-cut Bumper (for sensors) 302066**
	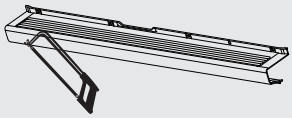	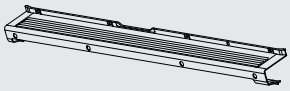
OLD SENSORS		**Pre-cut Bumper (without sensors) 302065**
		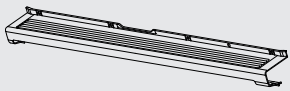

2

N° 17

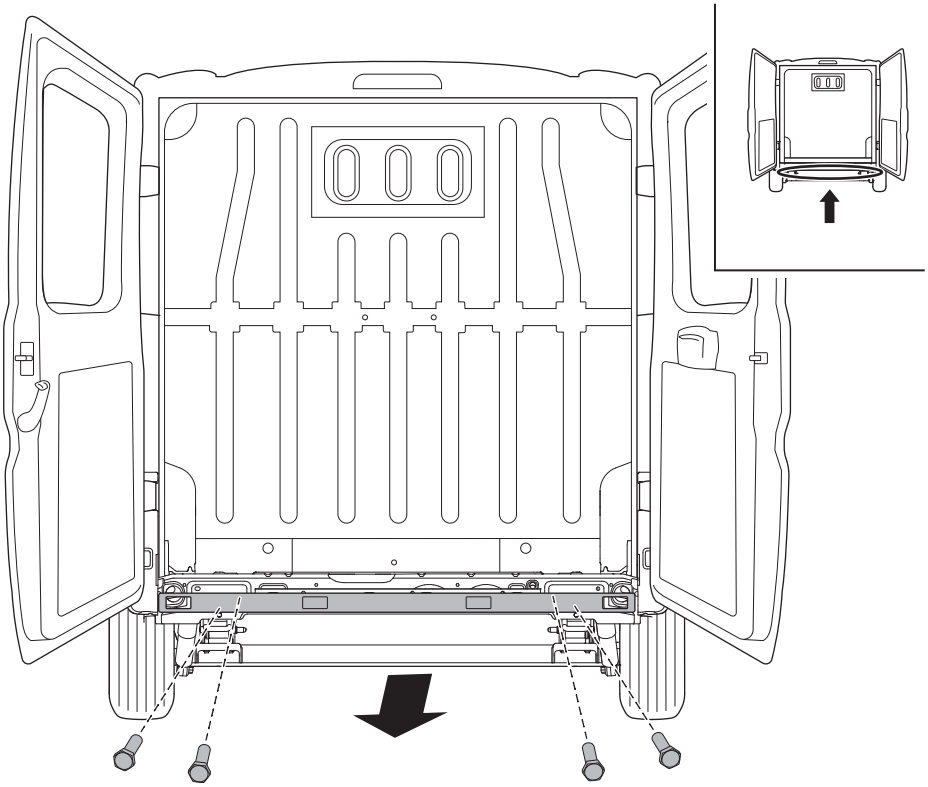

N° 17

3

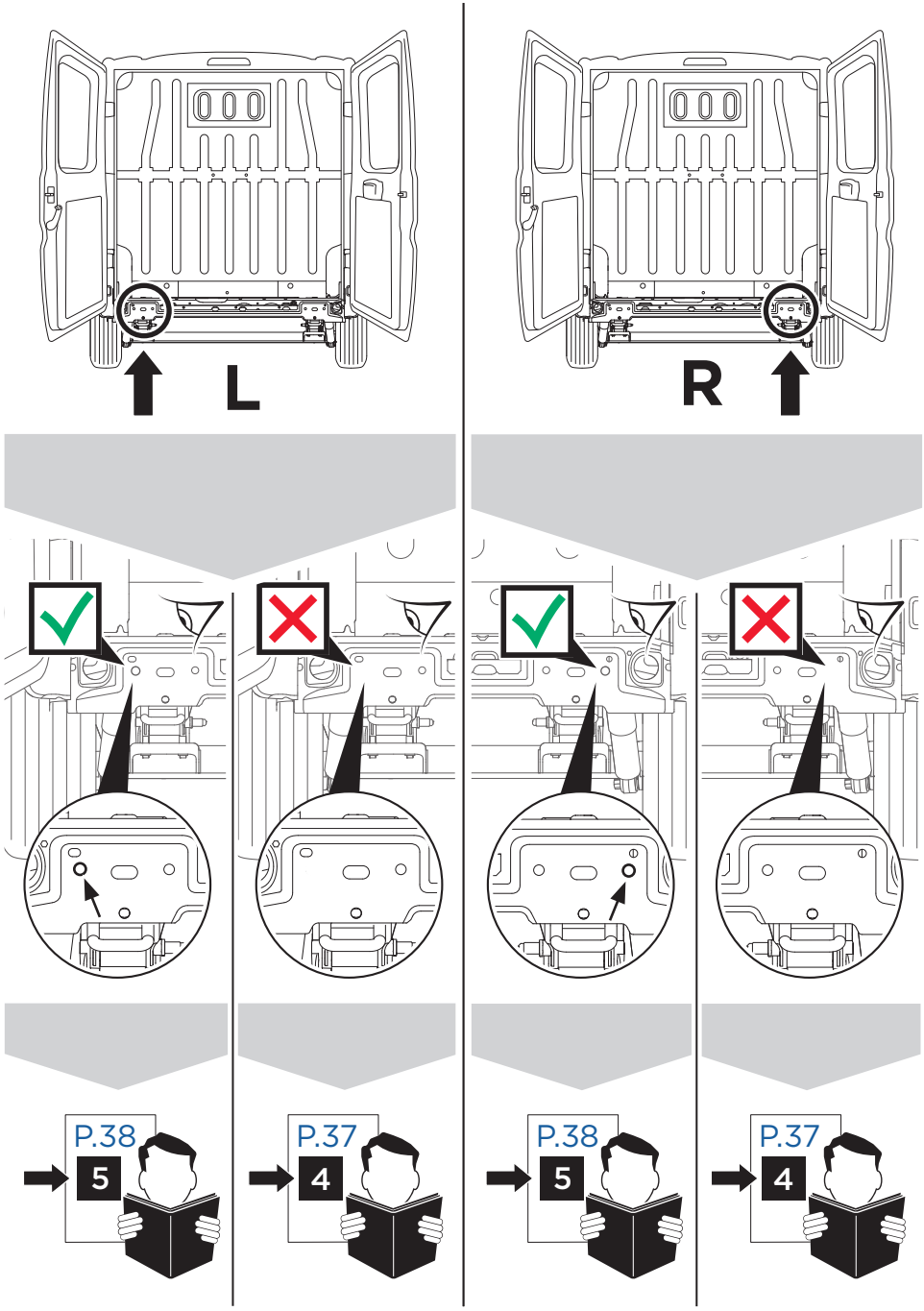

4

Ø 11 mm

Anti-Corrosion

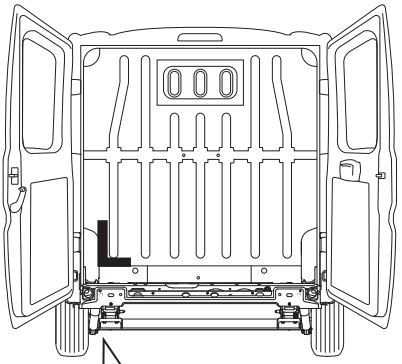
L

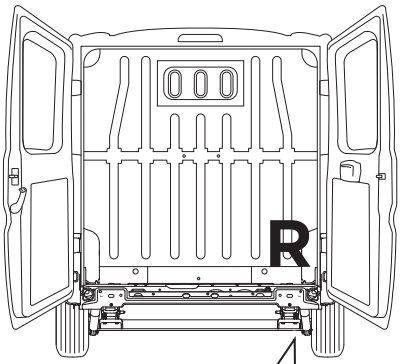
R

A

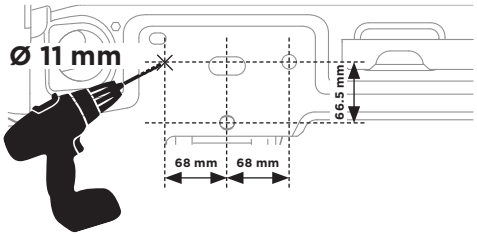
Ø 11 mm
66.5 mm
68 mm
68 mm

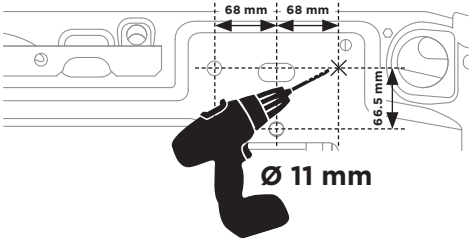
68 mm
68 mm
66.5 mm
Ø 11 mm

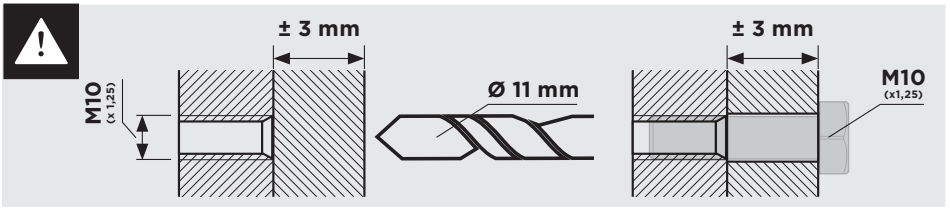
± 3 mm
M10
(x 1,25)
Ø 11 mm
± 3 mm
M10
(x1,25)

B

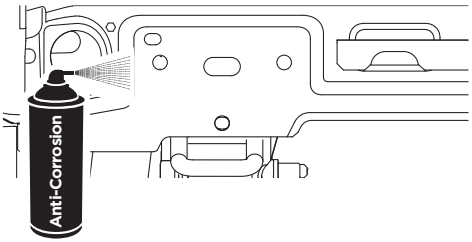
Anti-Corrosion

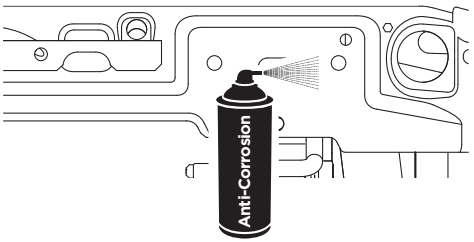
Anti-Corrosion

5

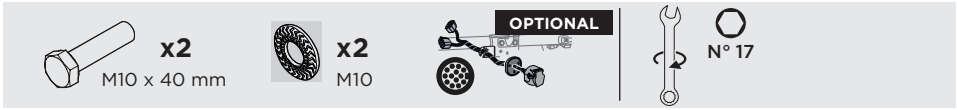
x2
M10 x 40 mm
x2
M10
OPTIONAL
N° 17

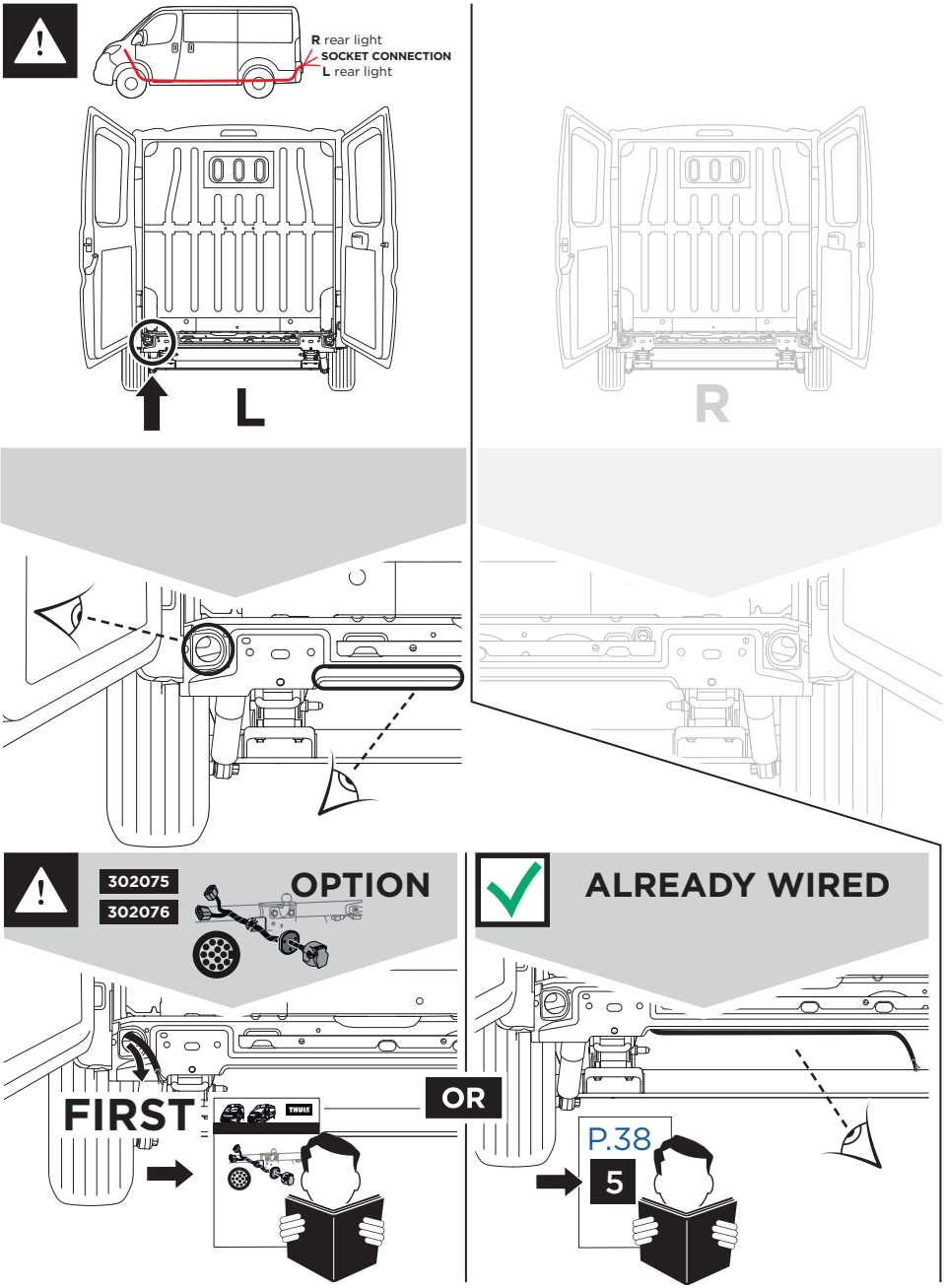
R rear light
SOCKET CONNECTION
L rear light
L
R
302075
302076
OPTION
ALREADY WIRED
FIRST
THULE
OR
P.38
5

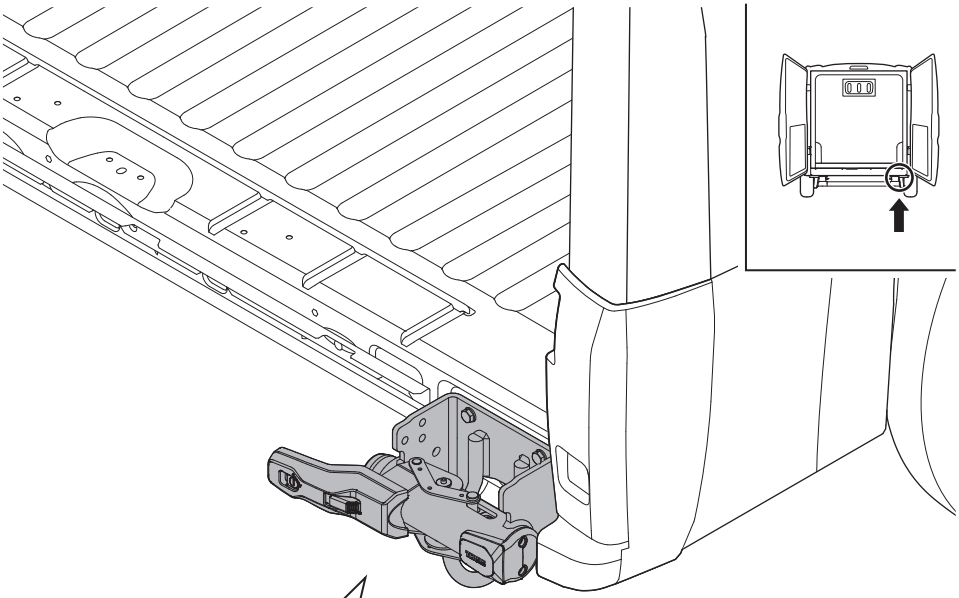

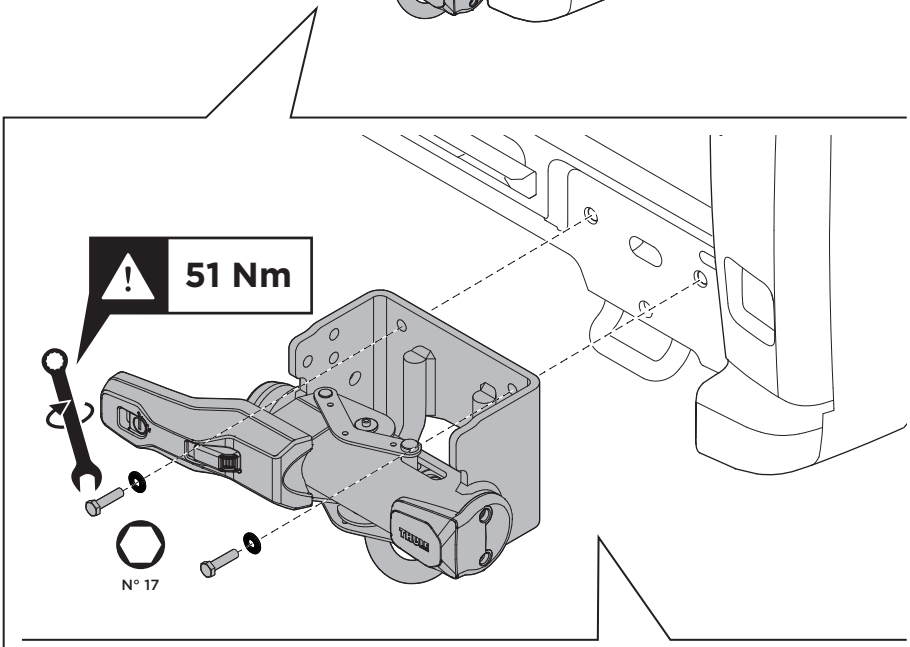
51 Nm
N° 17

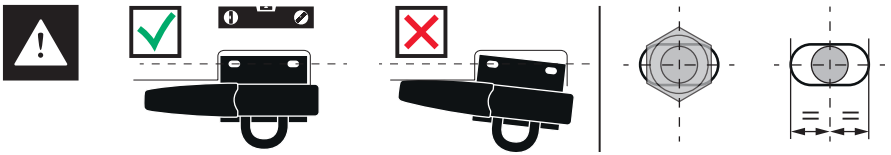

6

x2
M10 x 40 mm

x2
M10

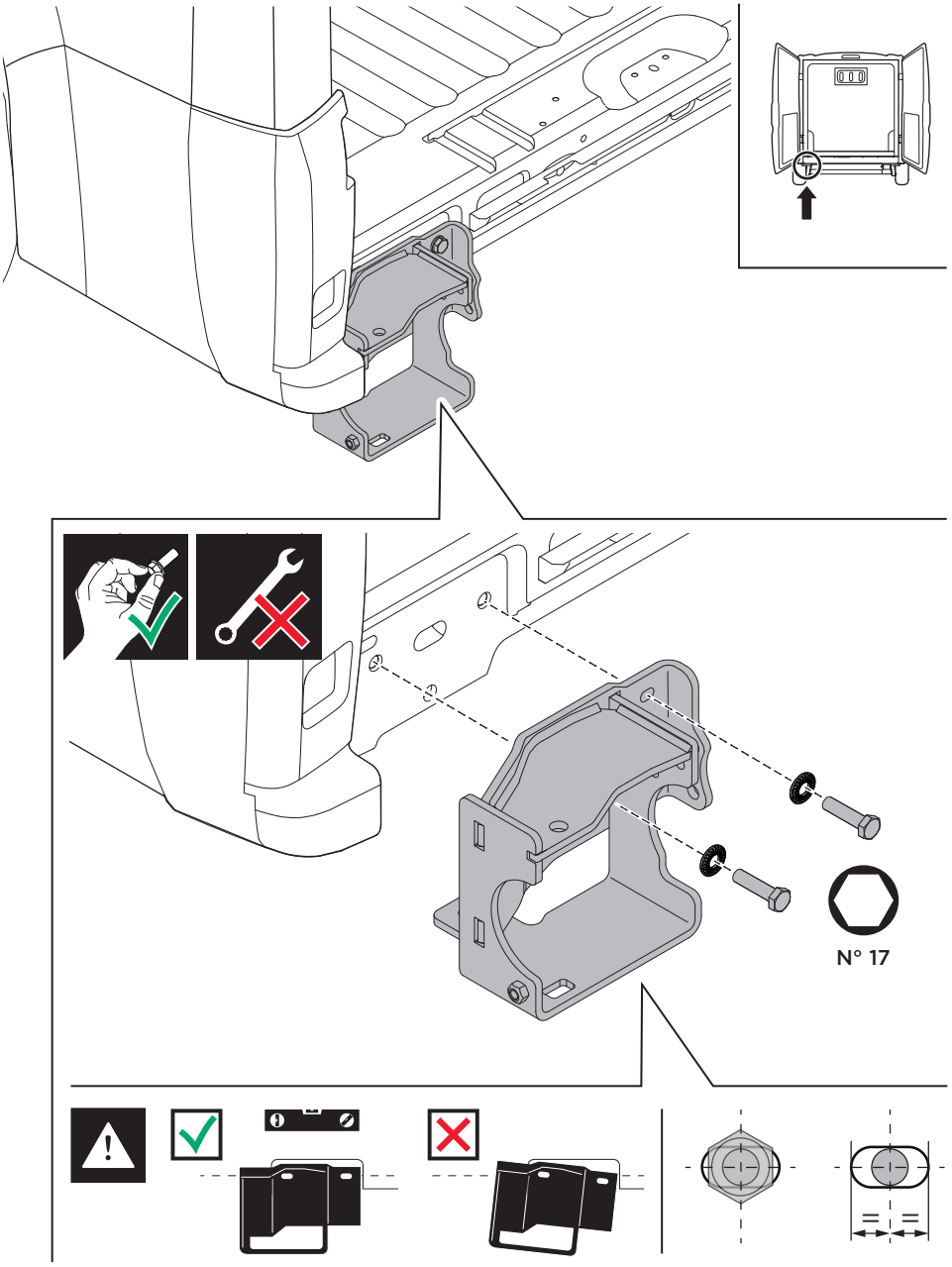

7

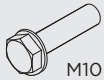
x6
M10 x 30 mm

x4
M10

x2
M10

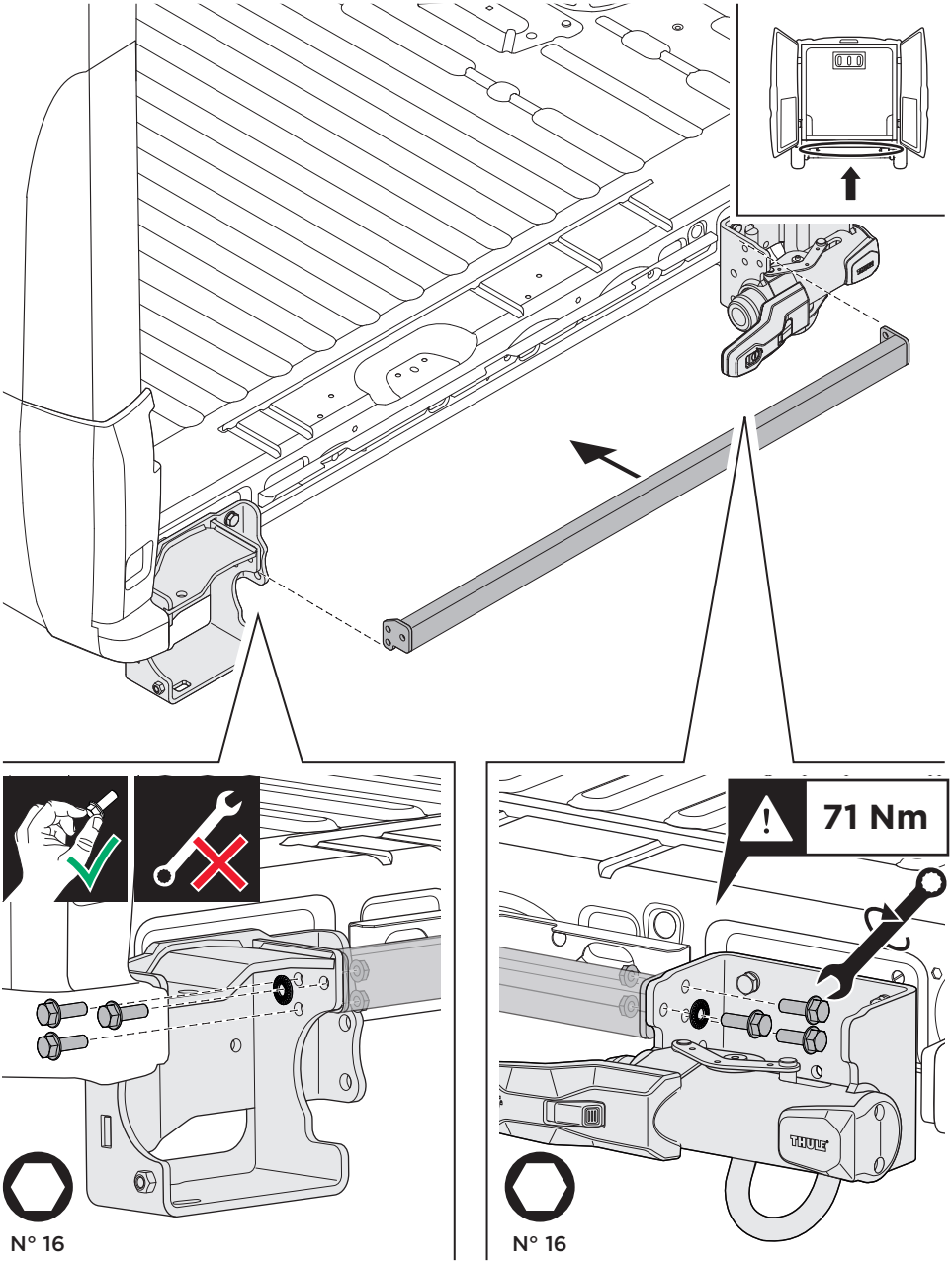

8

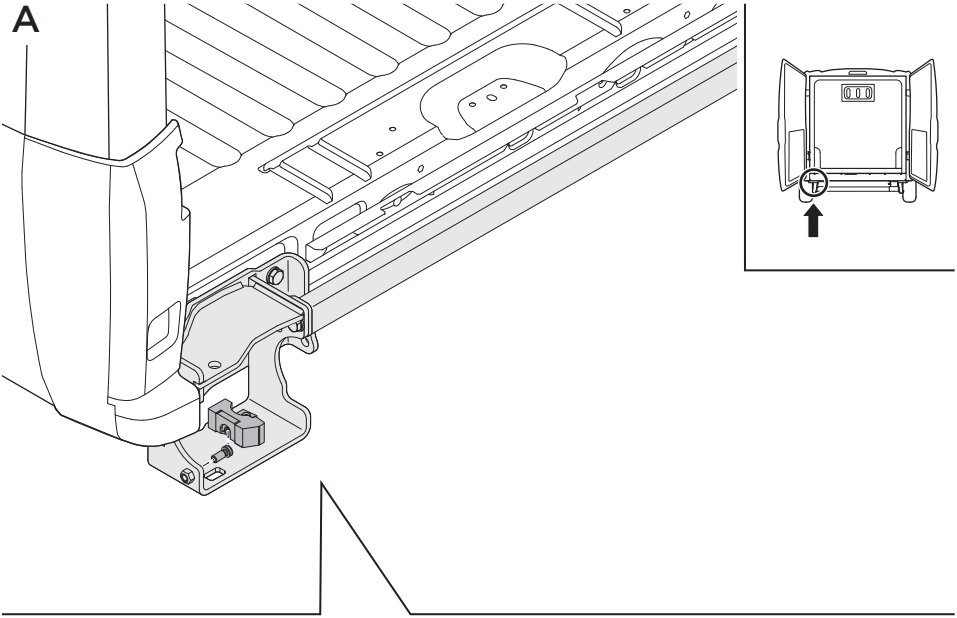

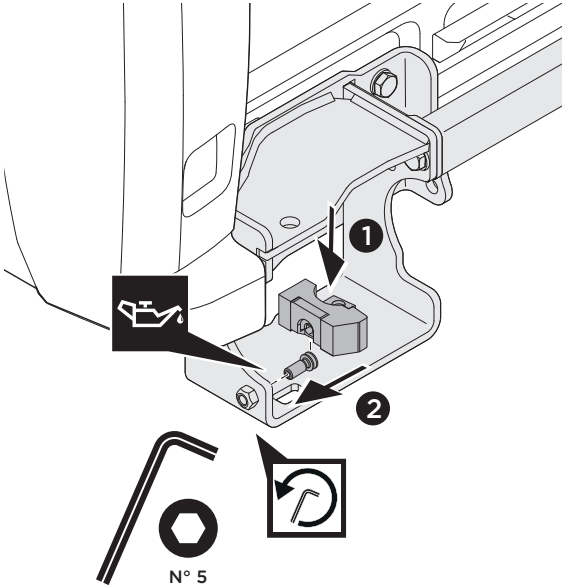

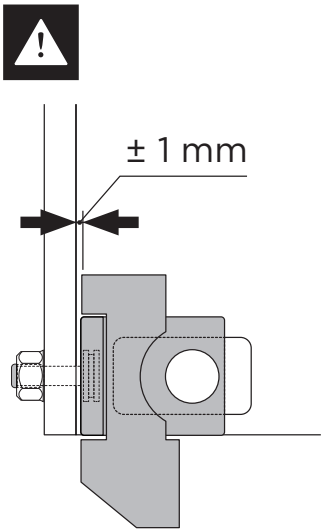

B

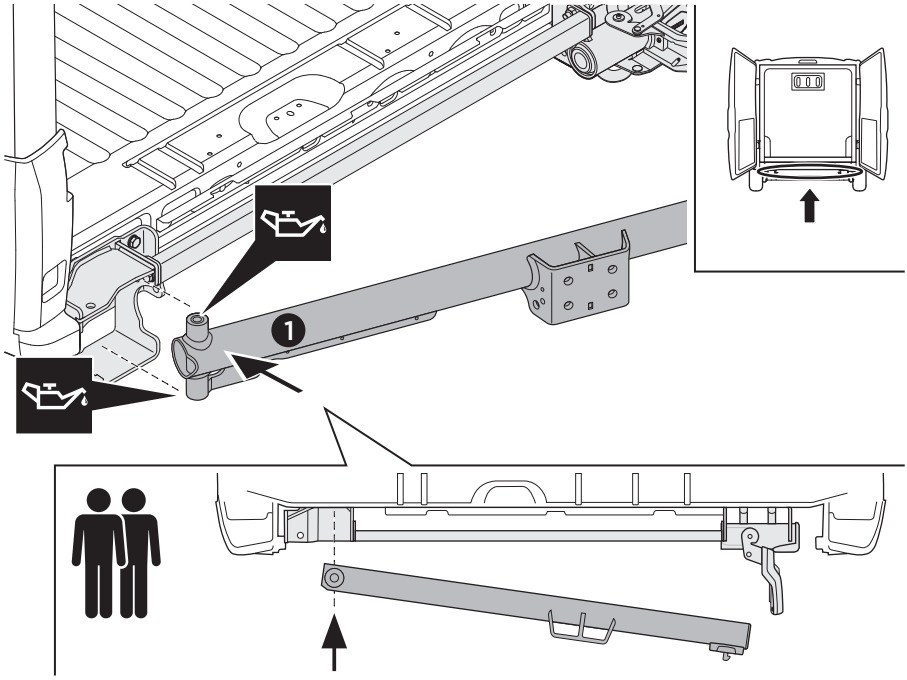

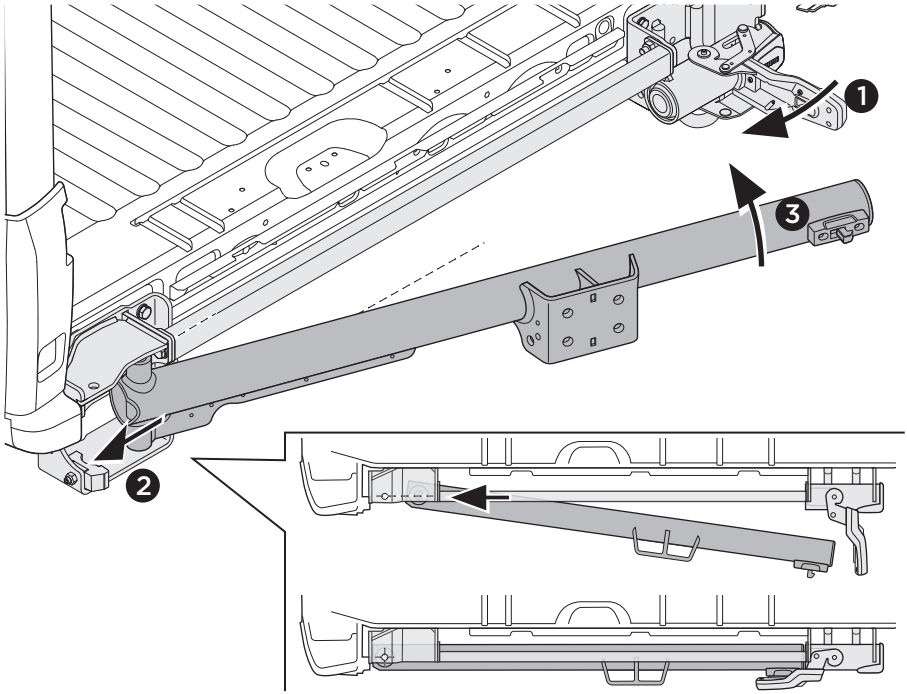

C

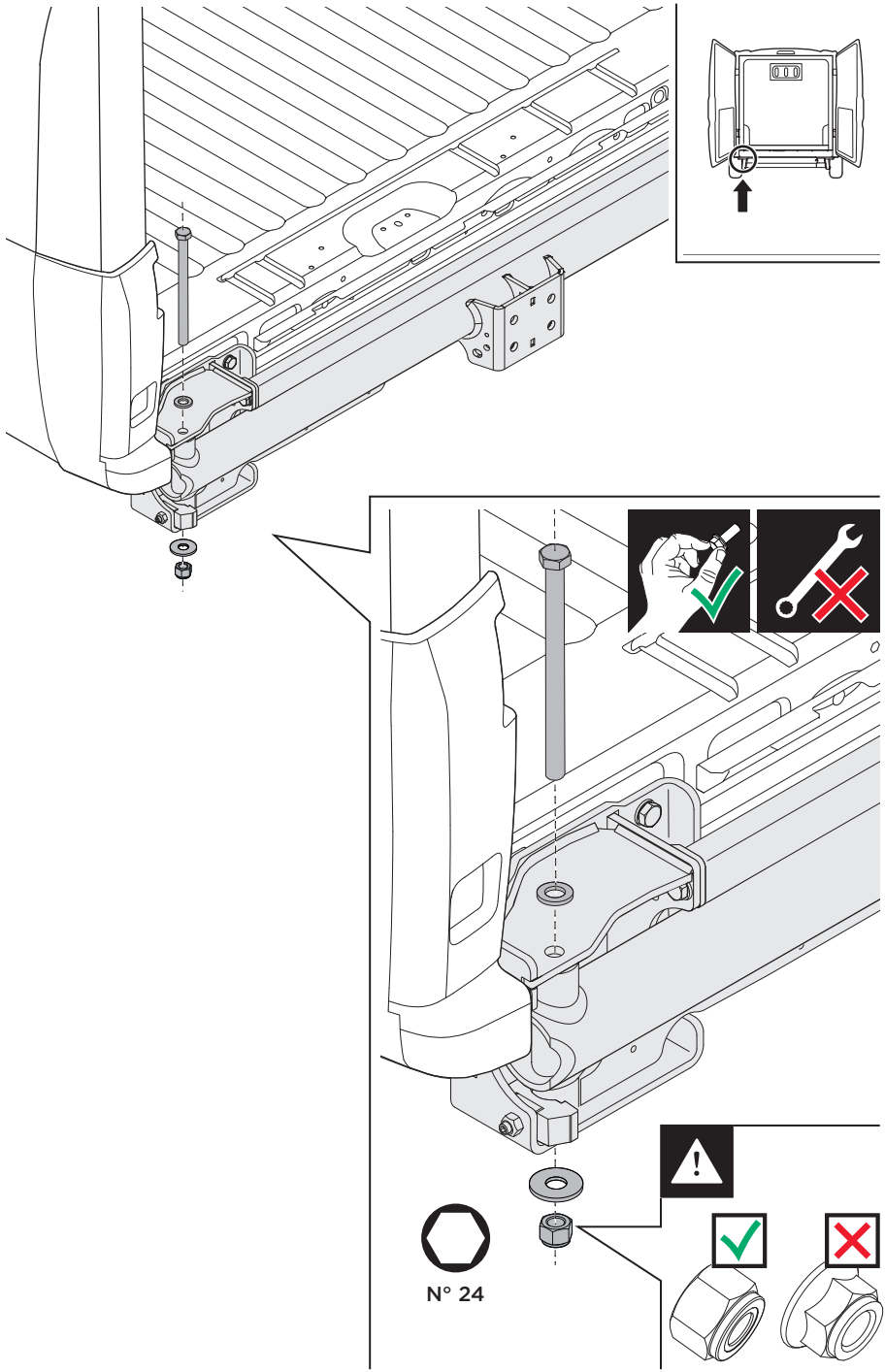

D

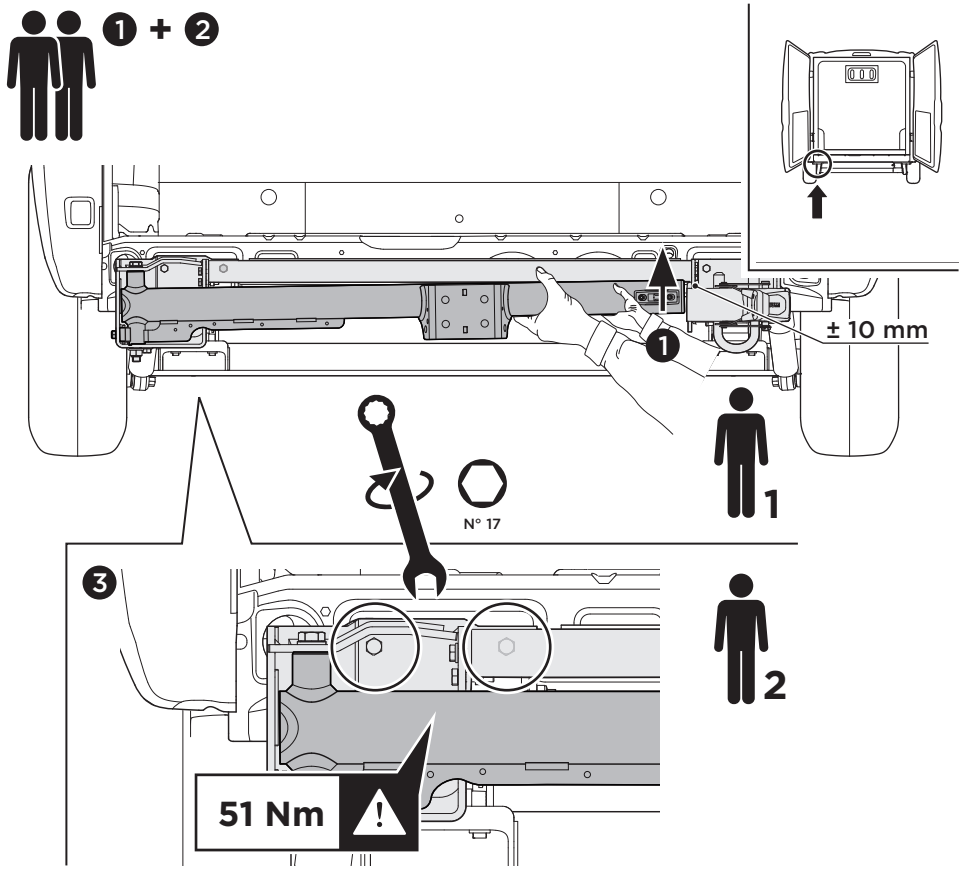

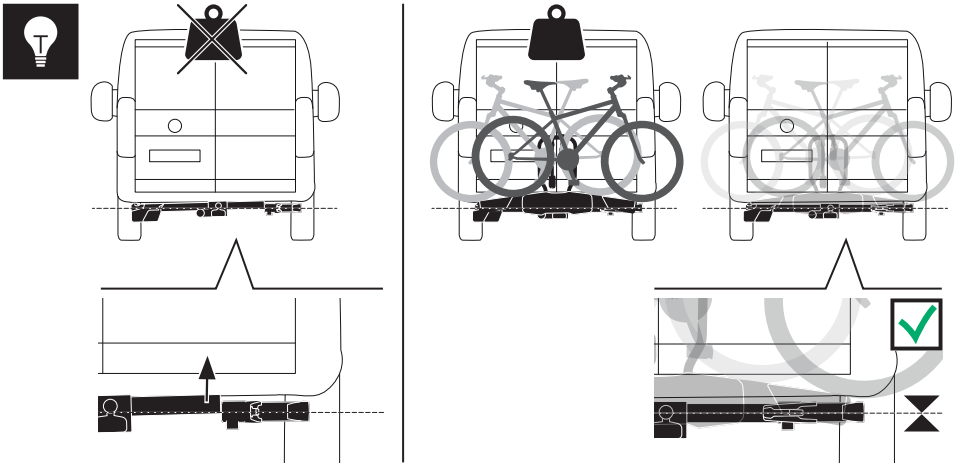

E

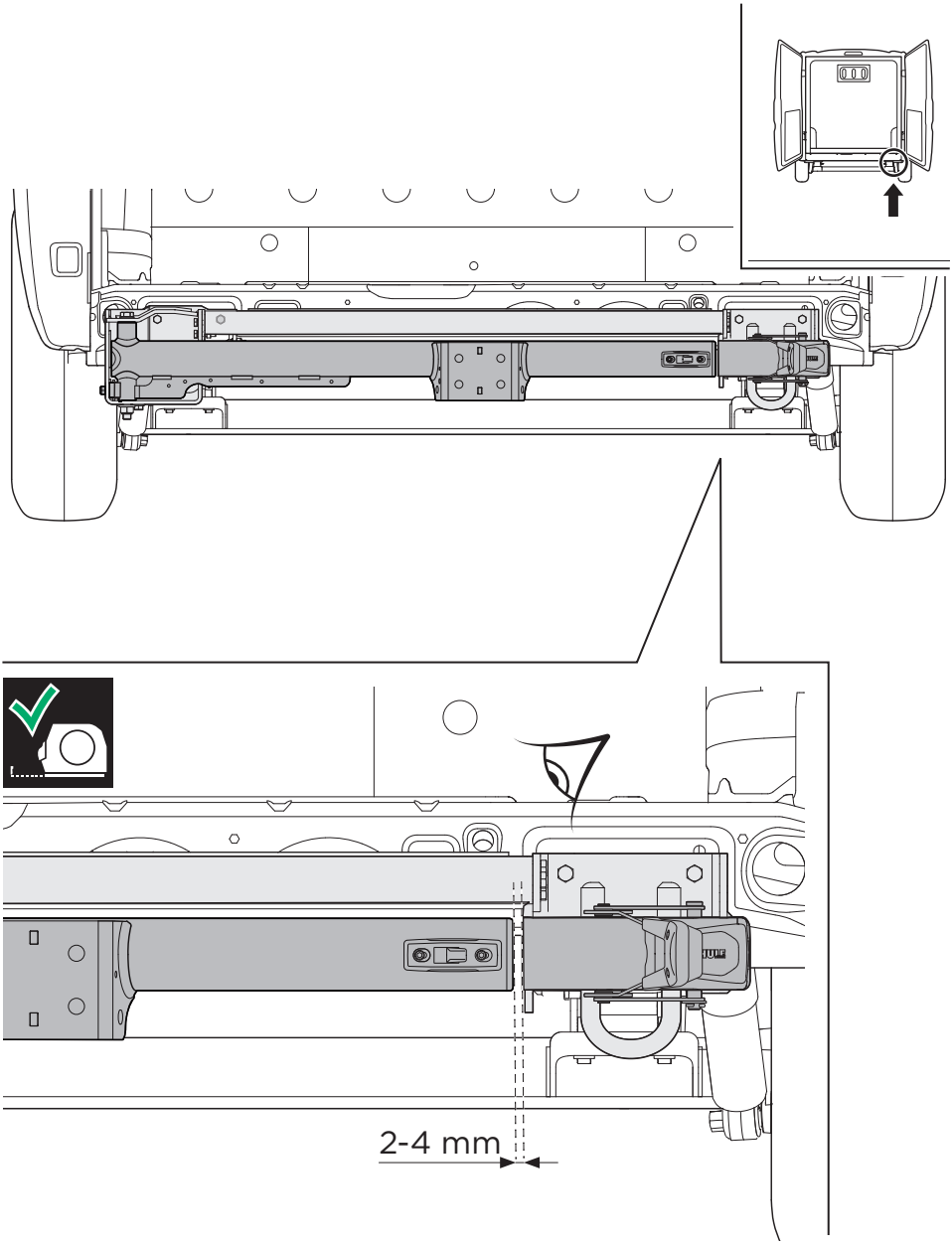

9

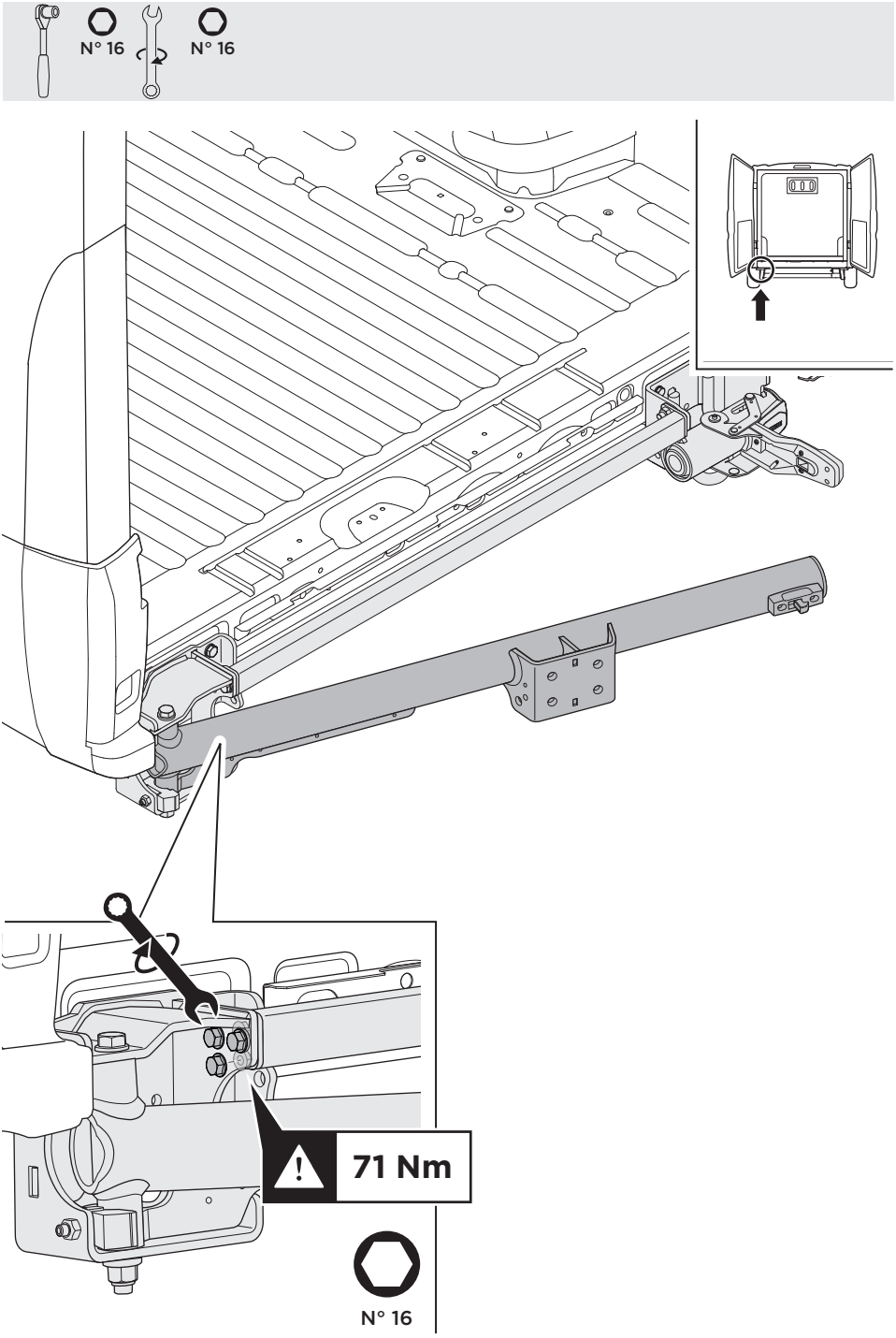

10

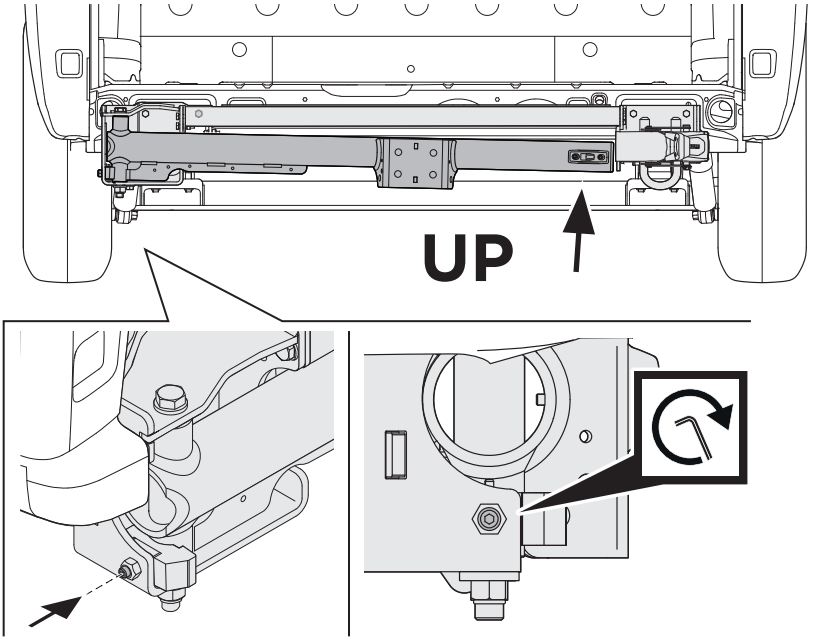

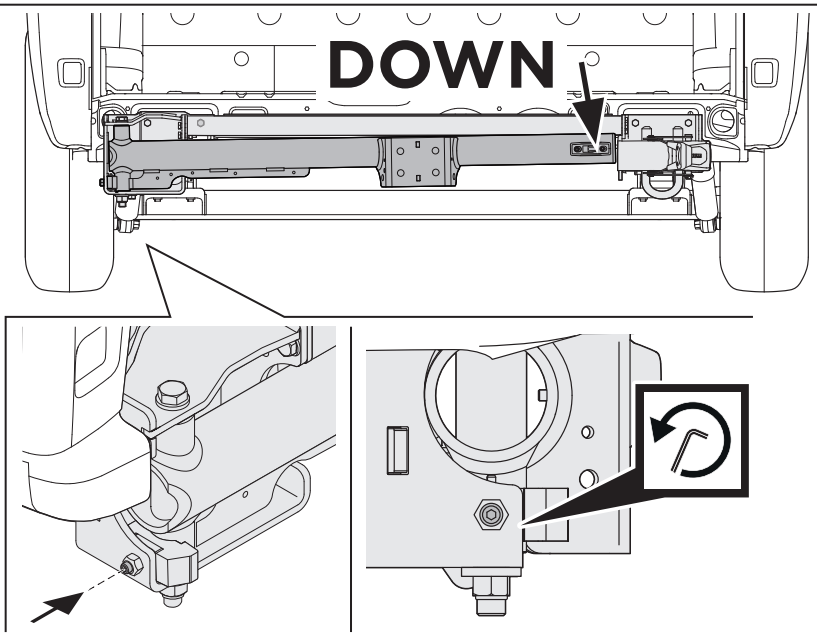

11

x1 x1 x1 x1 x1 x1 x3 x2 x1 x1
M10x40 mm
M10
M10
M12x45 mm
M12
M12
N° 17
N° 18
Ø 13 mm
Ø 20 mm

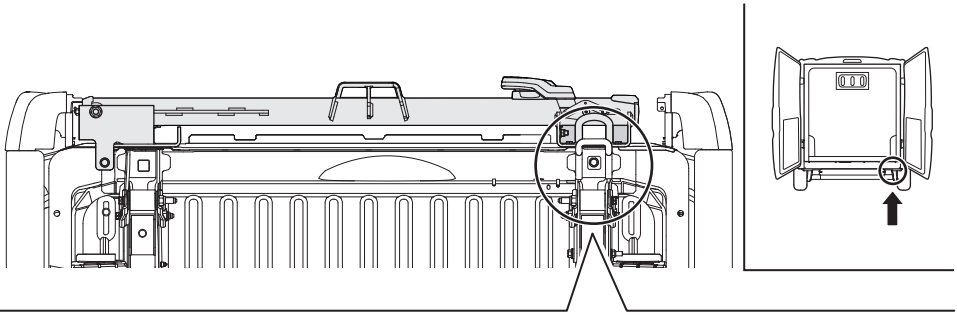

A

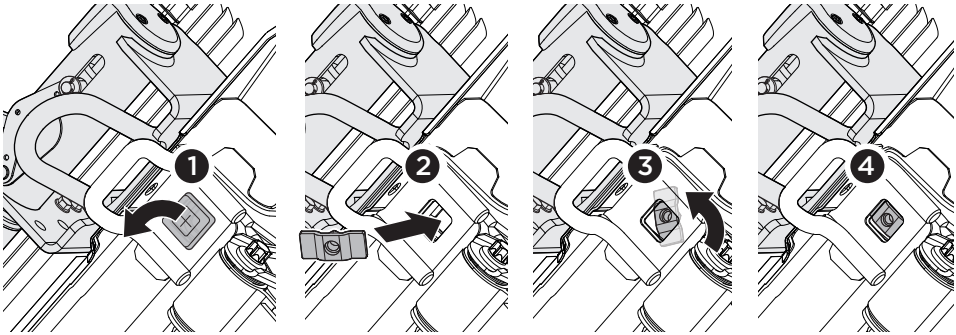
1
2
3
4

B

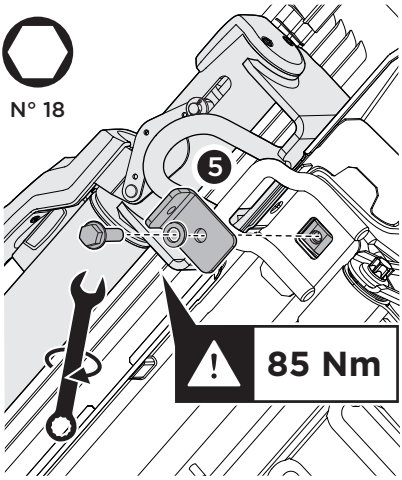
N° 18
5
85 Nm

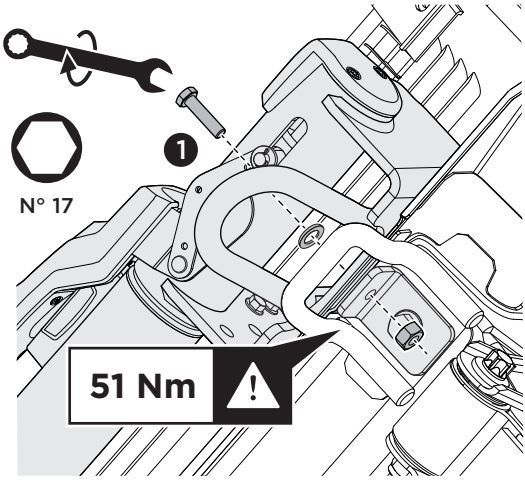
1
N° 17
51 Nm

Fiat Ducato IV 2006 **- XL (L4, H2-H3)**
Citroën Jumper 2006 **- XL (L4, H2-H3)**
Peugeot Boxer 2006 **- XL (L4, H2-H3)**

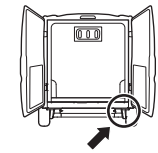

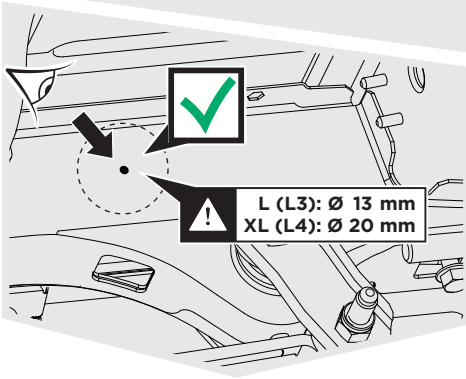

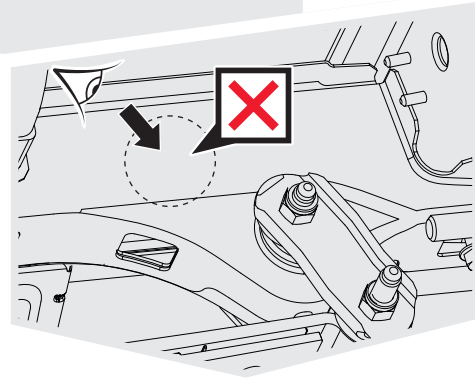

P.54
12

P.50
11
C...

C

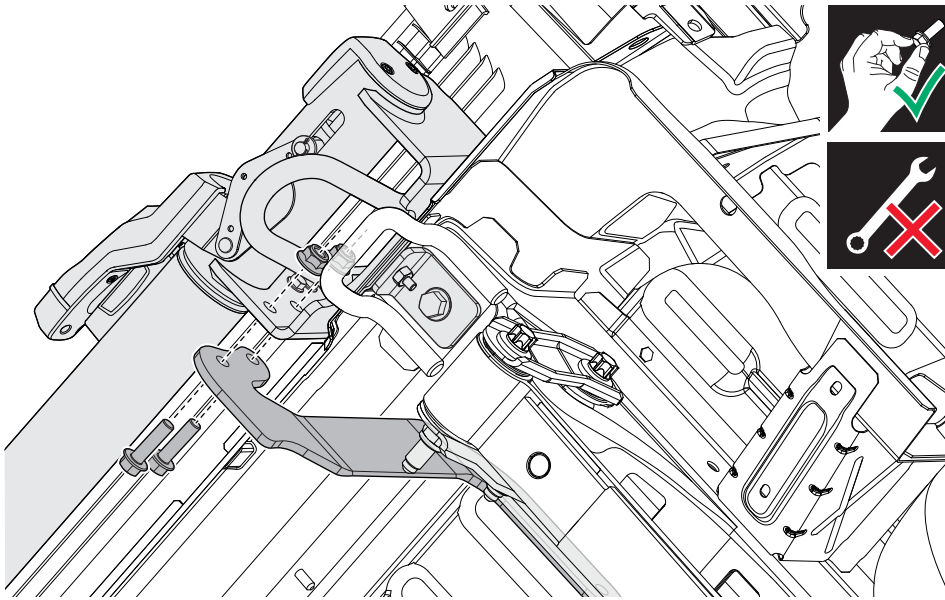

D

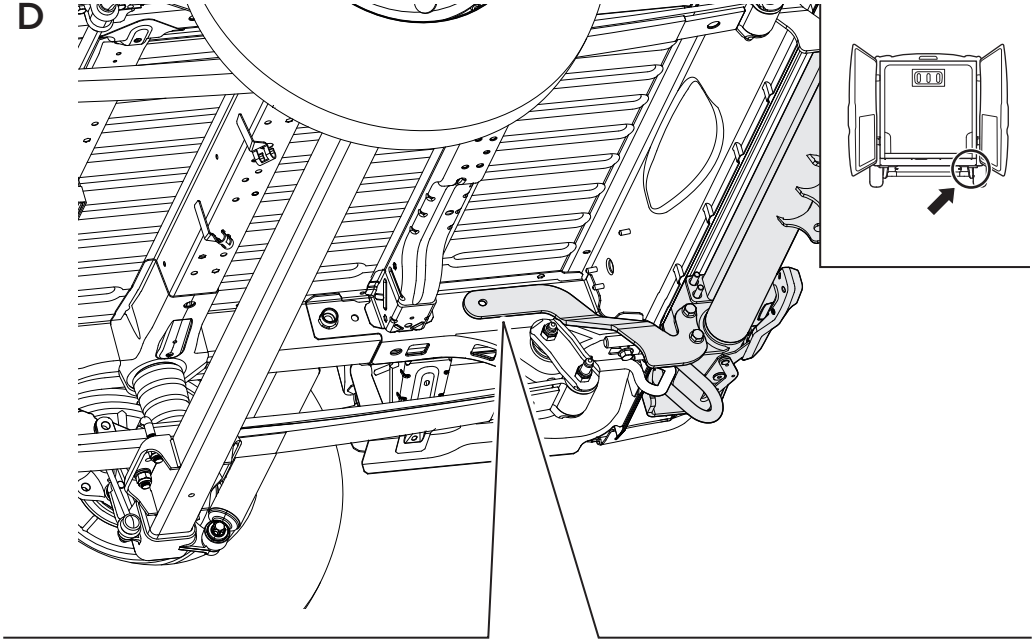

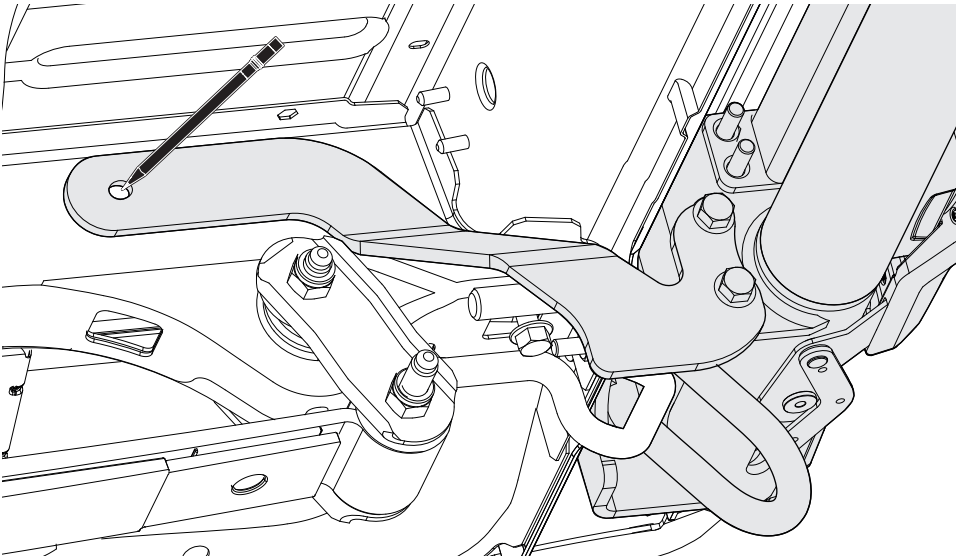

E

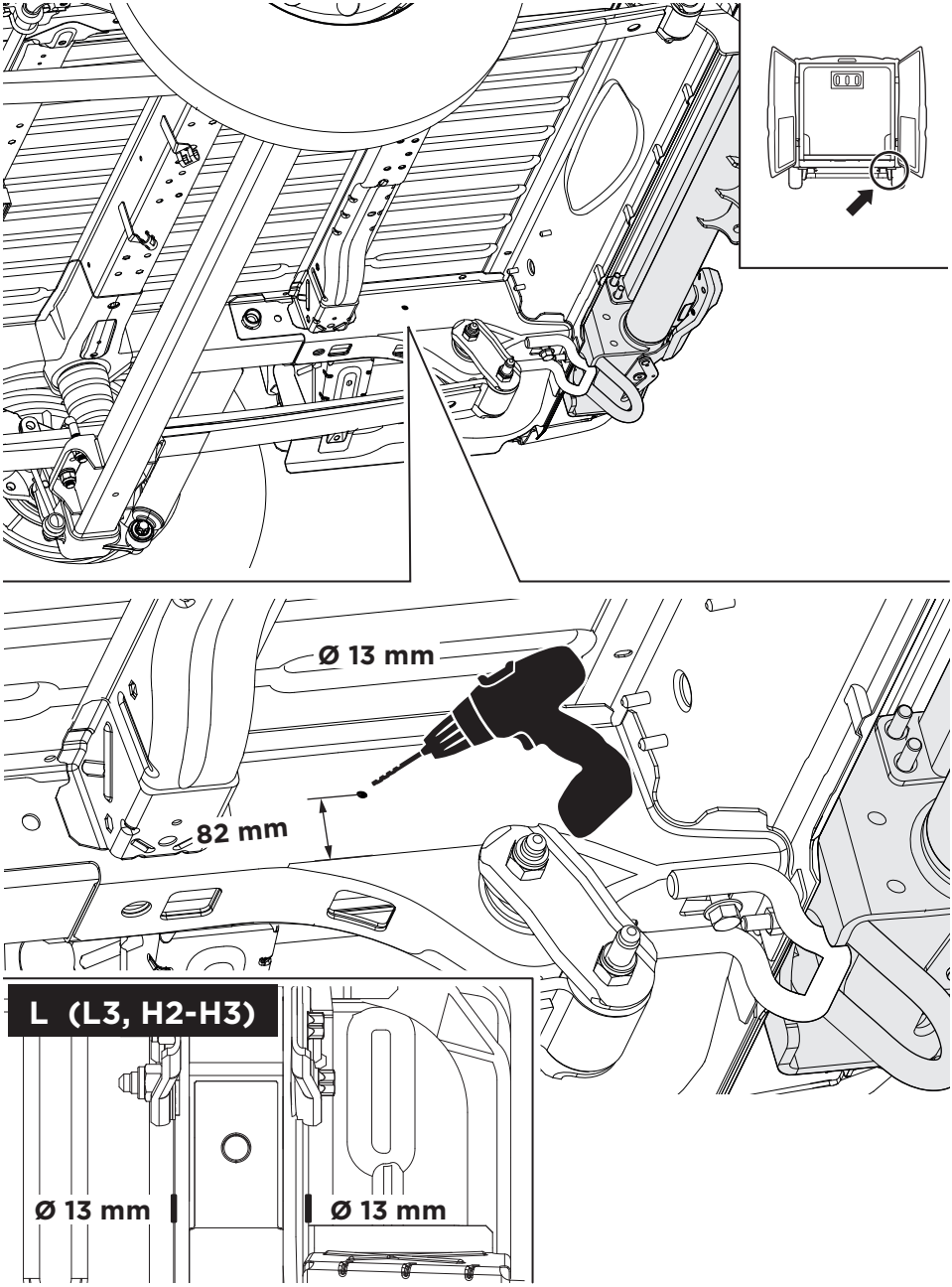

F

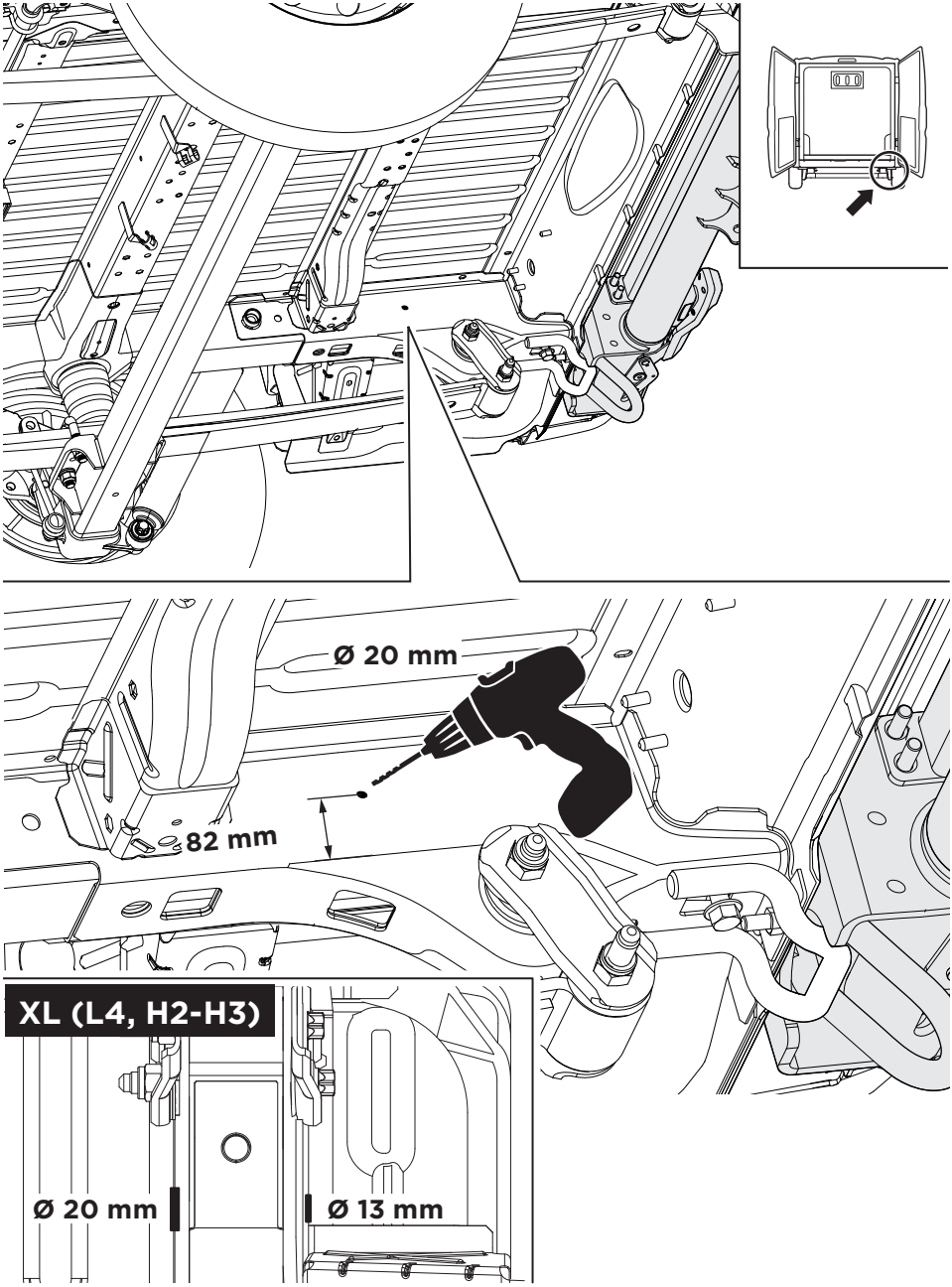

12

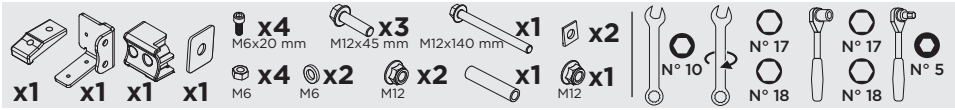
x1
x1
x1
x1
x4
M6x20 mm
x3
M12x45 mm
x1
M12x140 mm
x2
x4
M6
x2
M6
x2
M12
x1
x1
M12
N° 10
N° 17
N° 18
N° 17
N° 18
N° 5

A

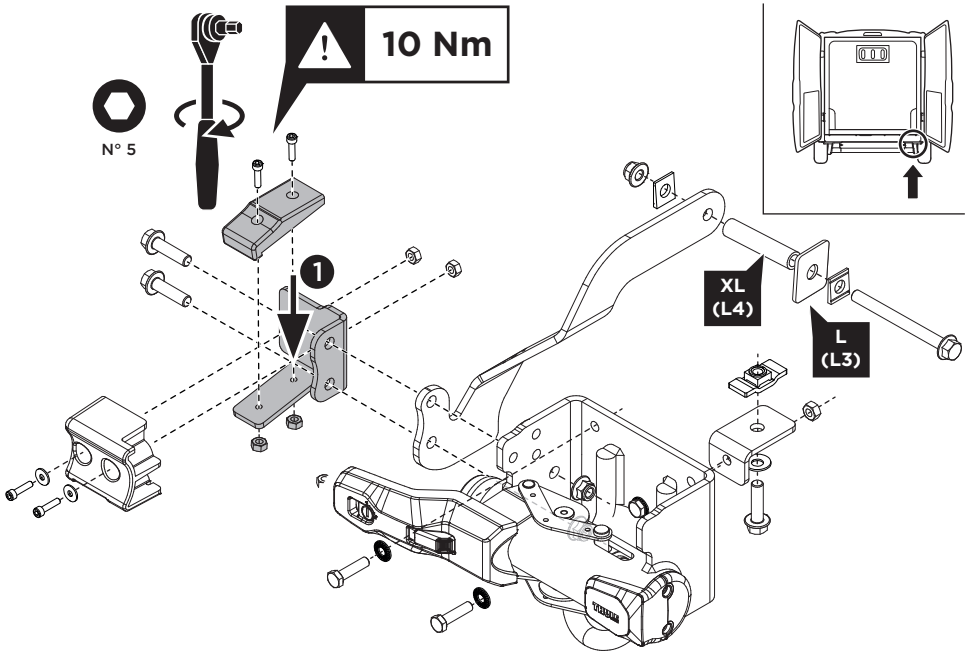
10 Nm
N° 5
1
XL
(L4)
L
(L3)

B

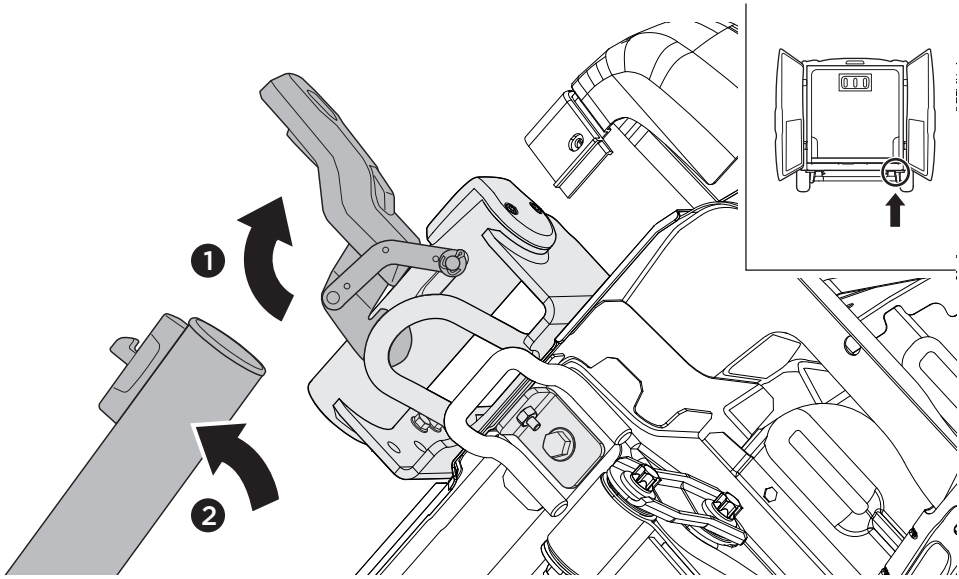
1
2

C

L (L3, H2-H3)

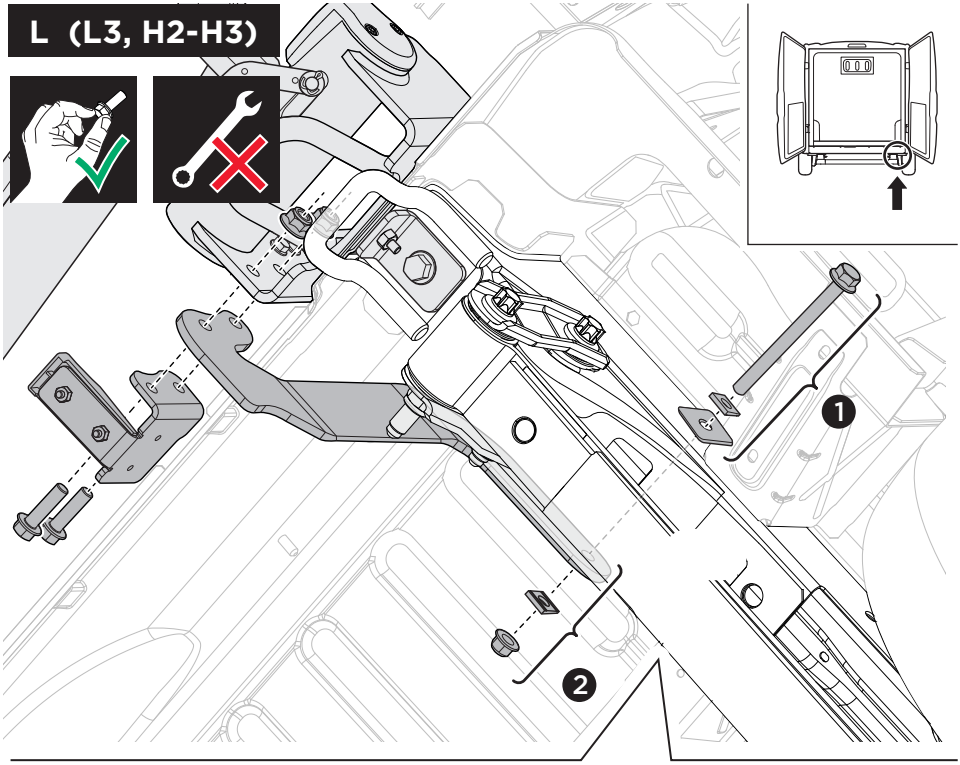

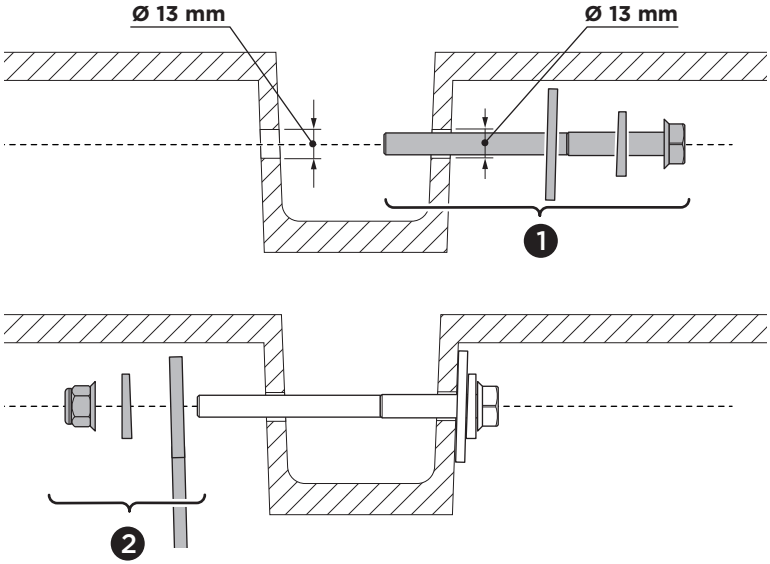

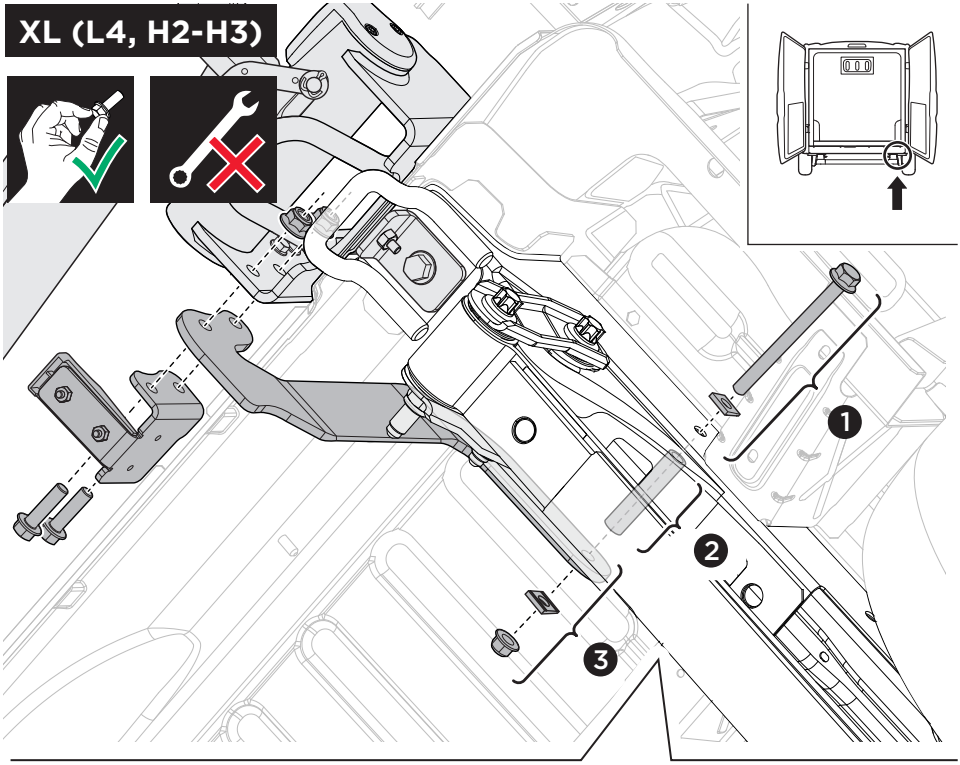
XL (L4, H2-H3)
1
2
3

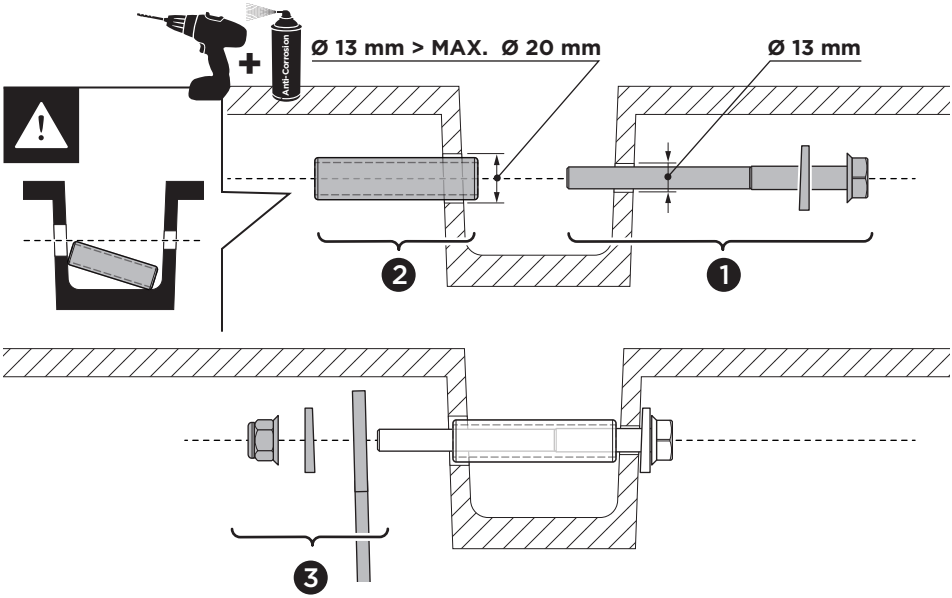
Anti-Corrosion
Ø 13 mm > MAX. Ø 20 mm
Ø 13 mm
2
1
3

D

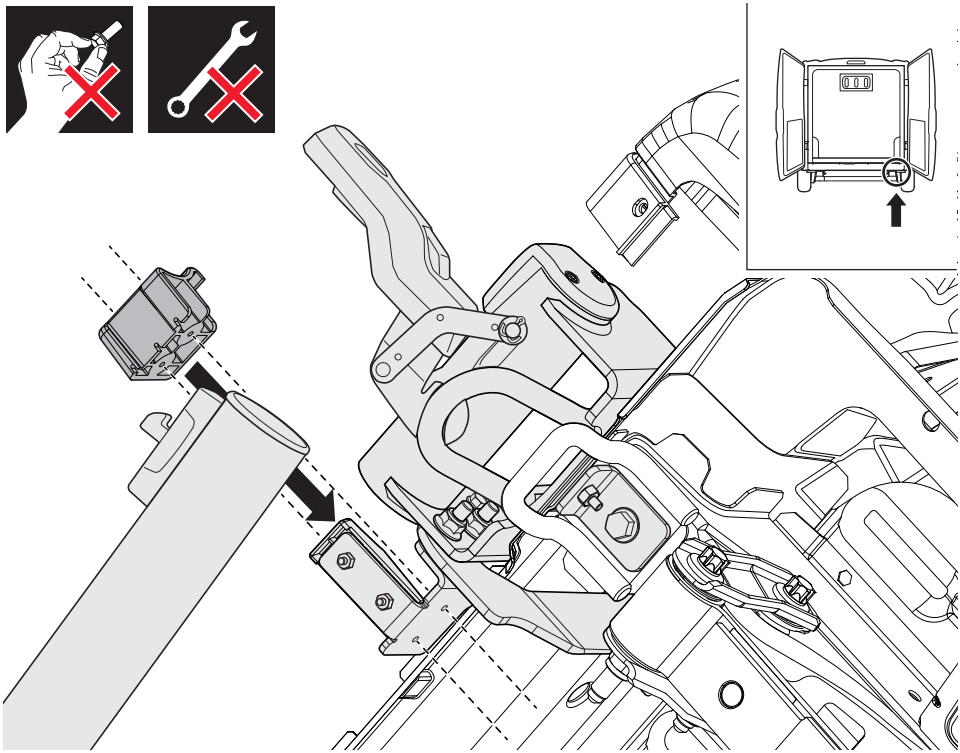

E

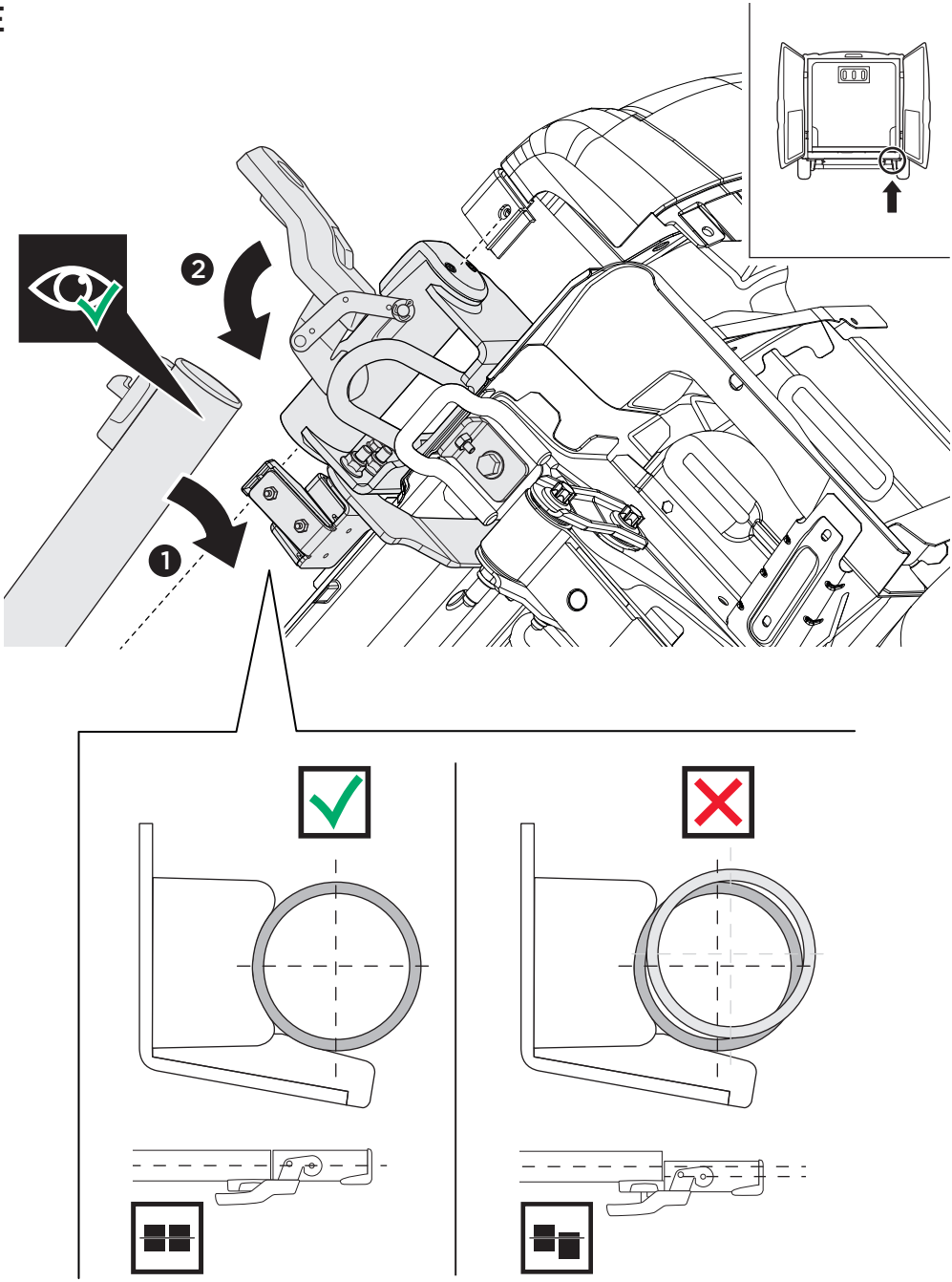

F

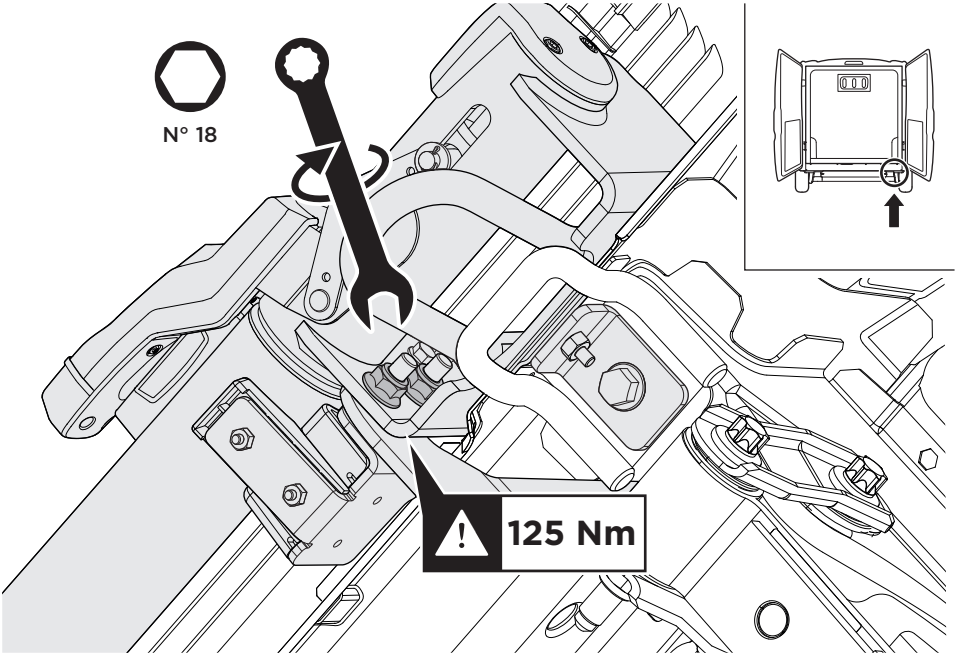

G

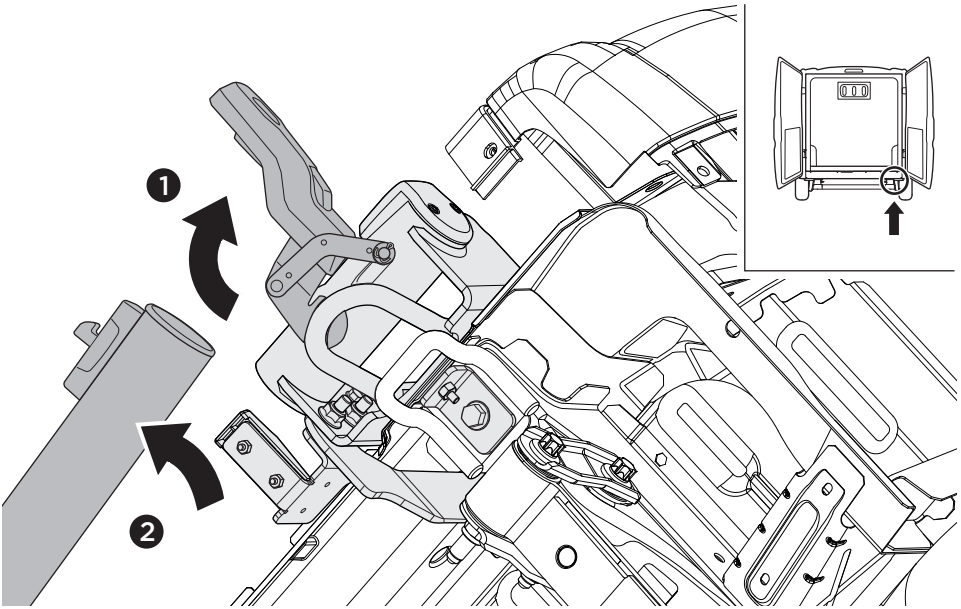

H

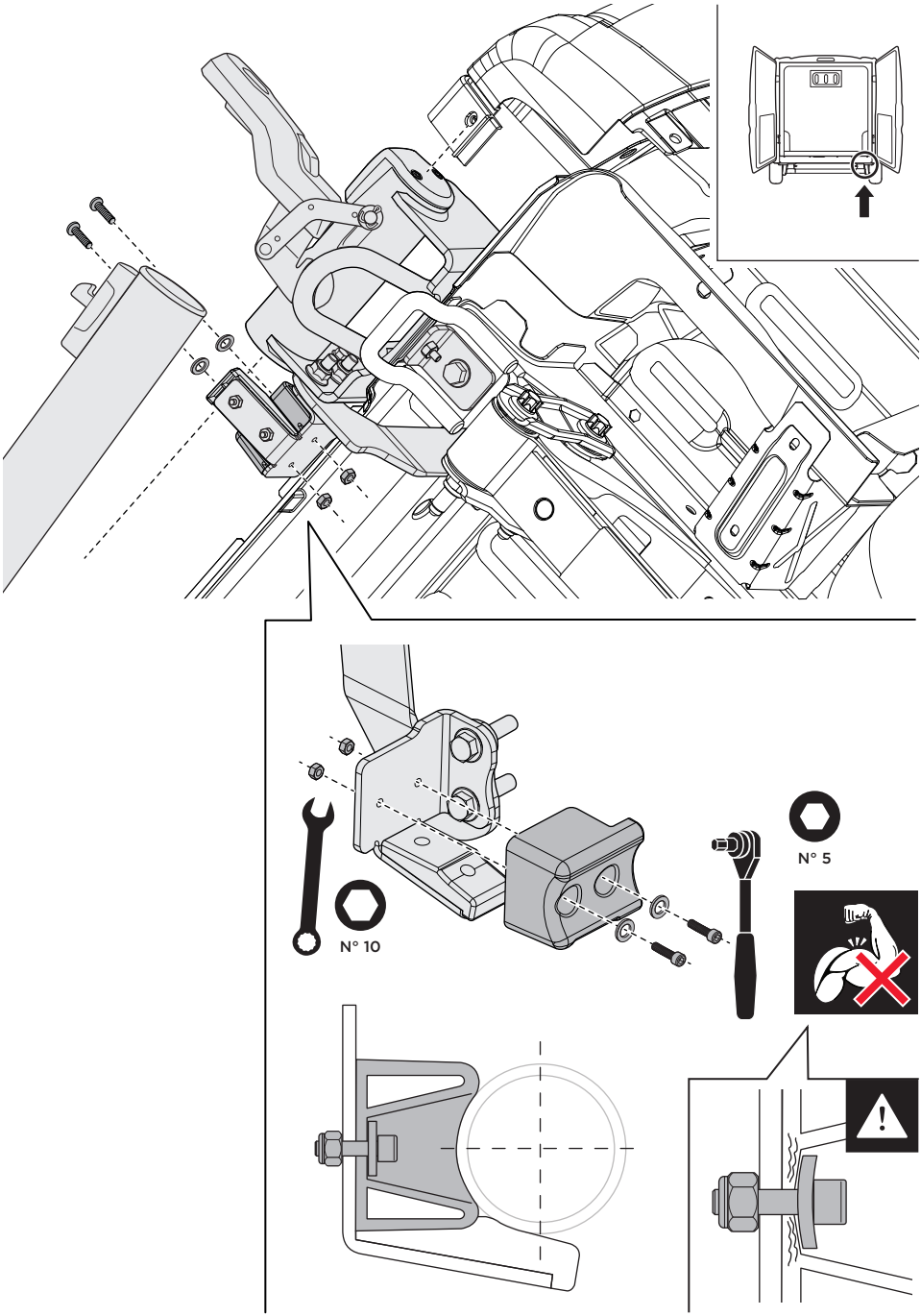

I

L (L3, H2-H3)

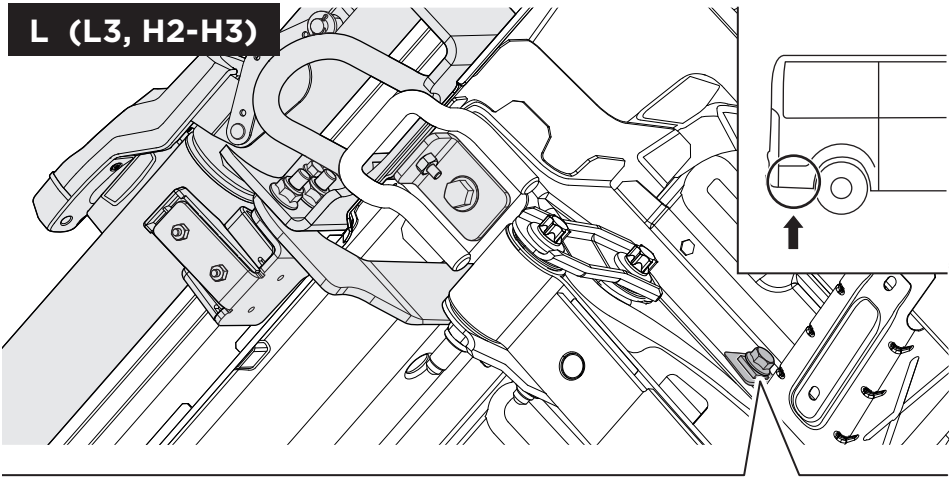

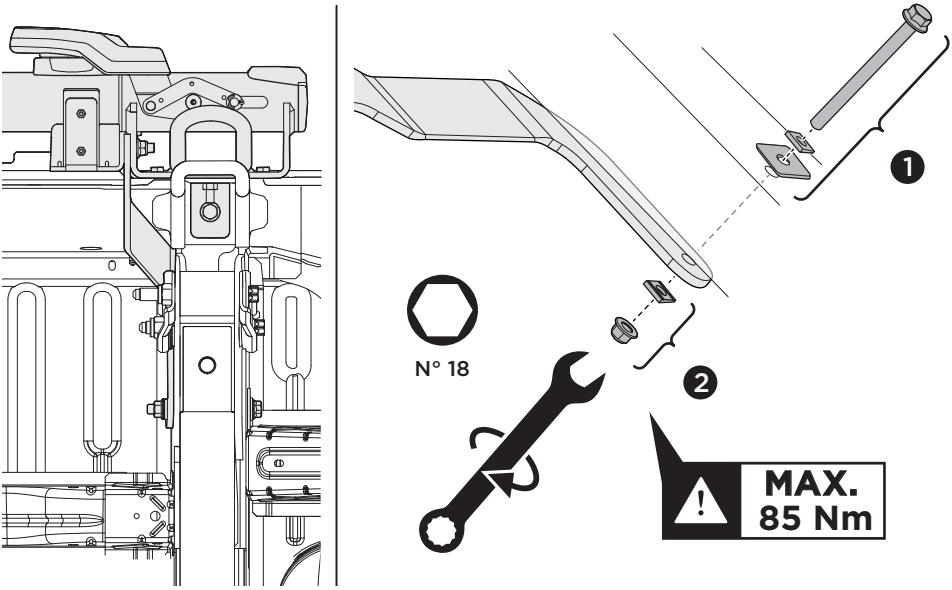

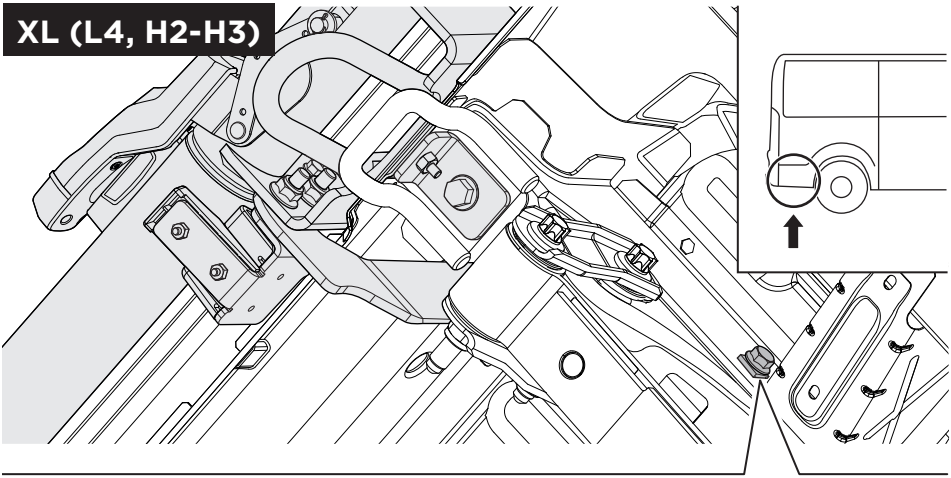
XL (L4, H2-H3)

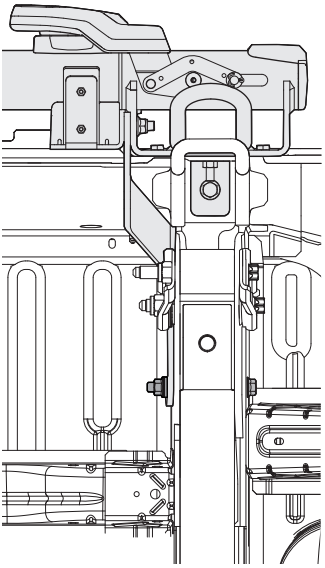

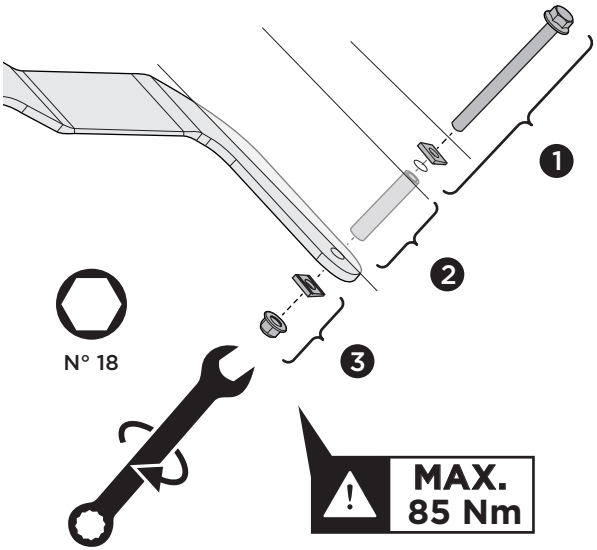
1
2
3
N° 18
MAX.
85 Nm

13

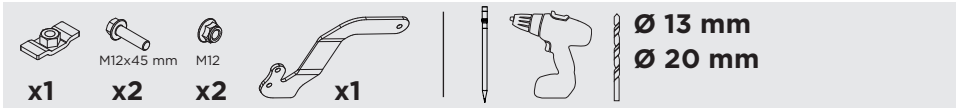

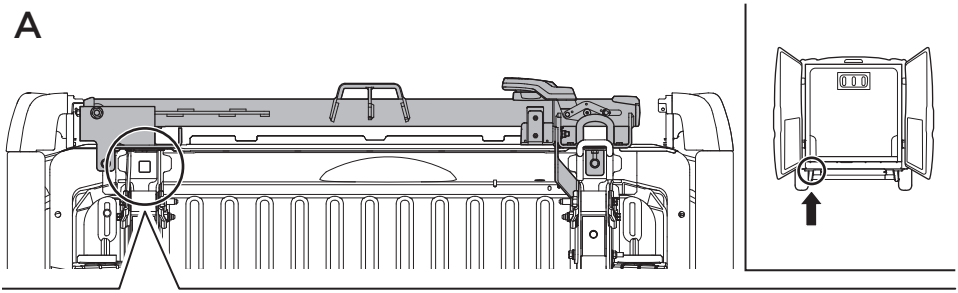

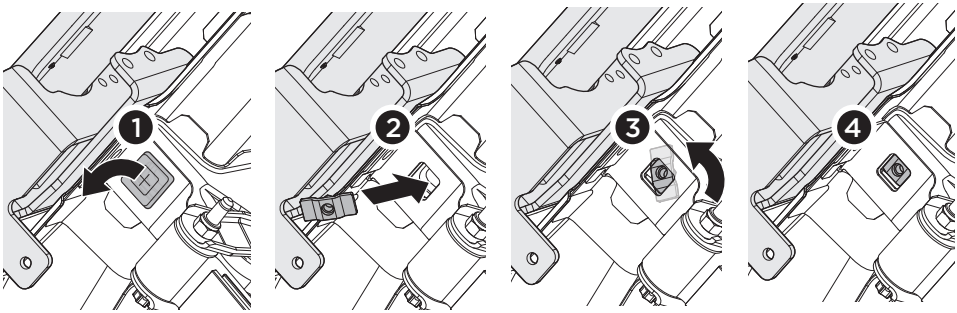

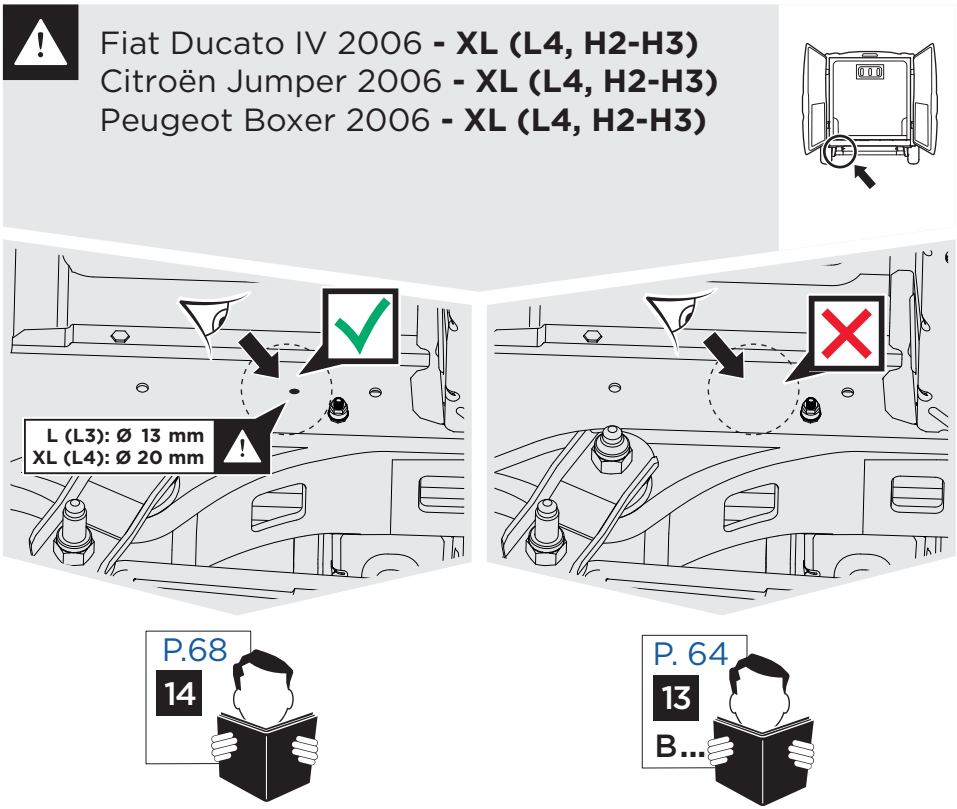
Fiat Ducato IV 2006 - XL (L4, H2-H3)
Citroën Jumper 2006 - XL (L4, H2-H3)
Peugeot Boxer 2006 - XL (L4, H2-H3)
L (L3): Ø 13 mm
XL (L4): Ø 20 mm
P.68
14
P. 64
13
B...

B

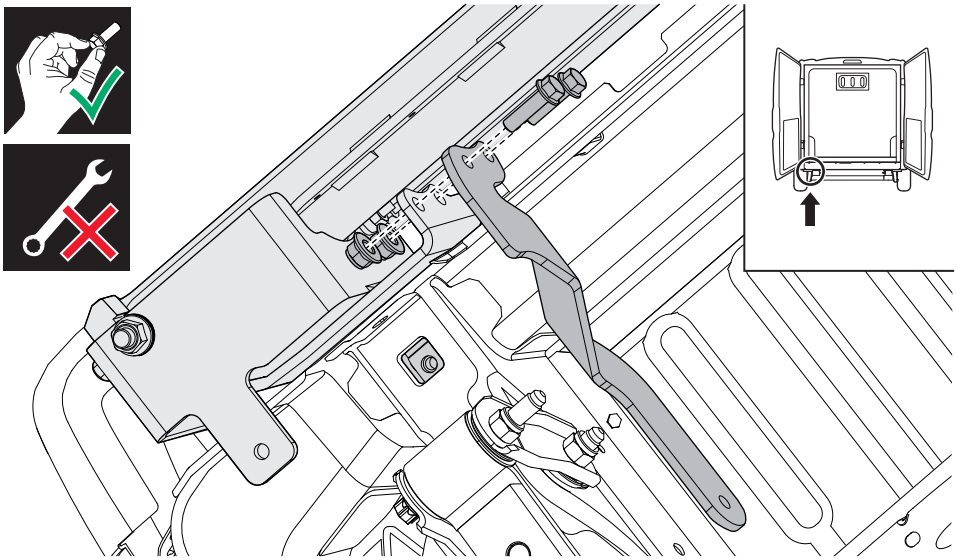

C

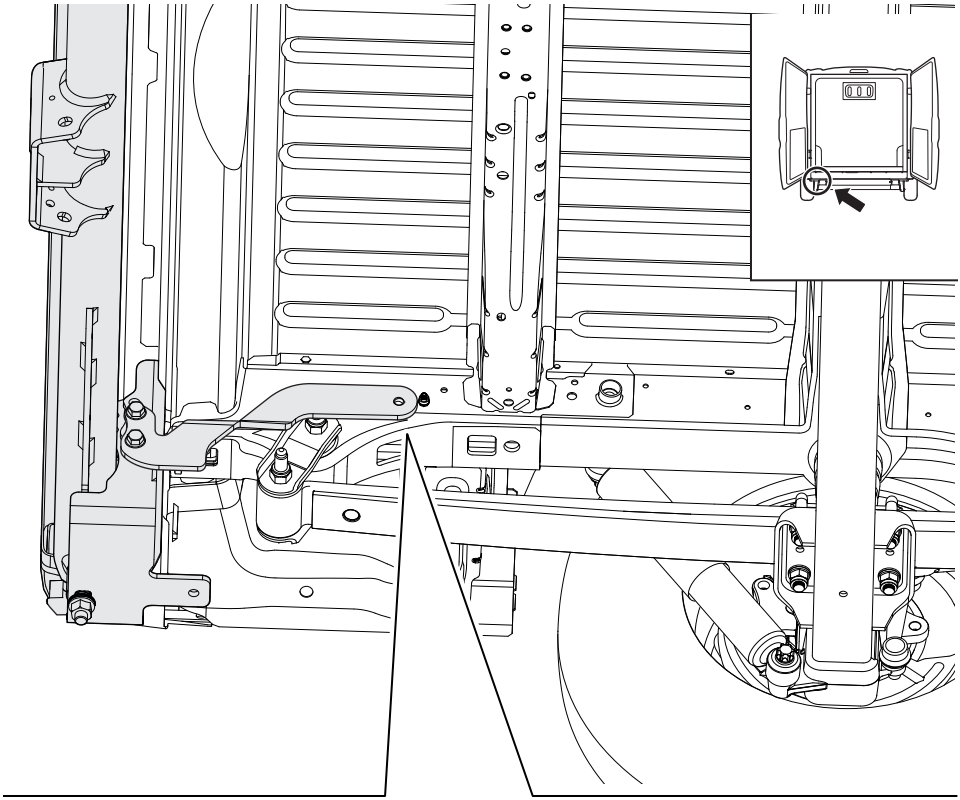

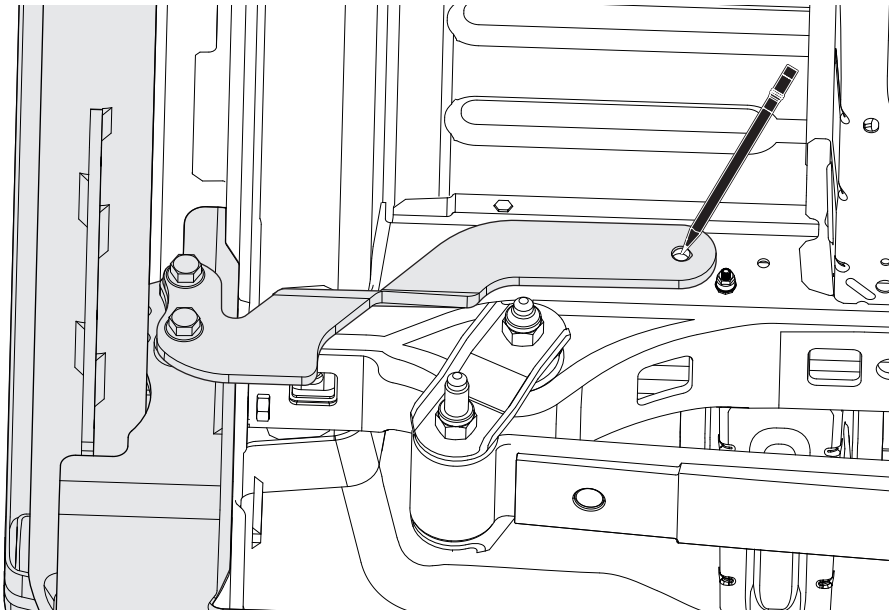

D

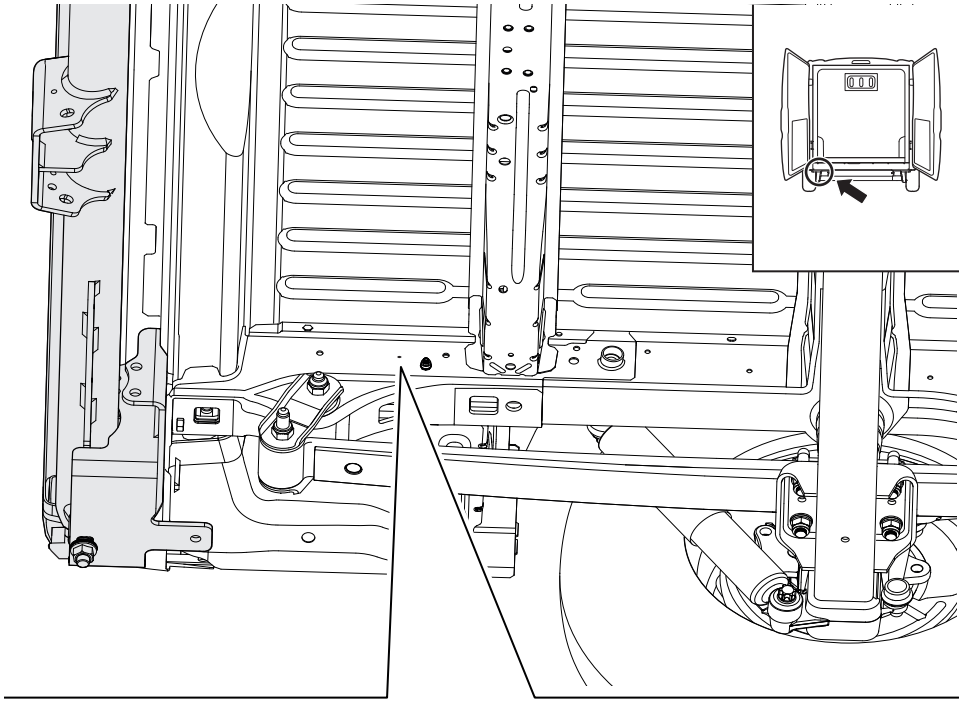

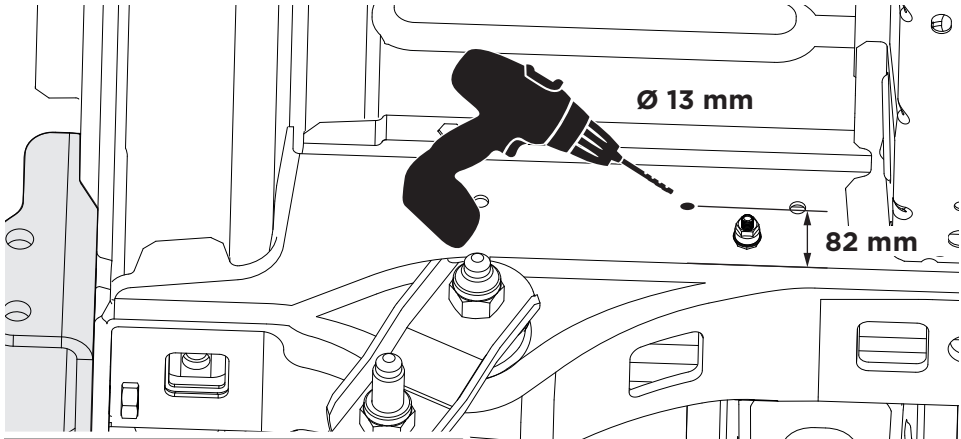

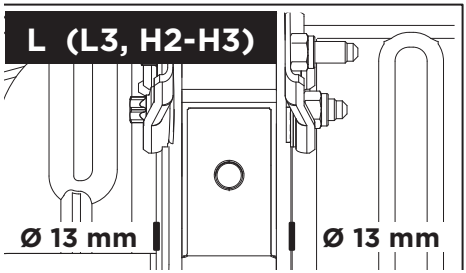

E

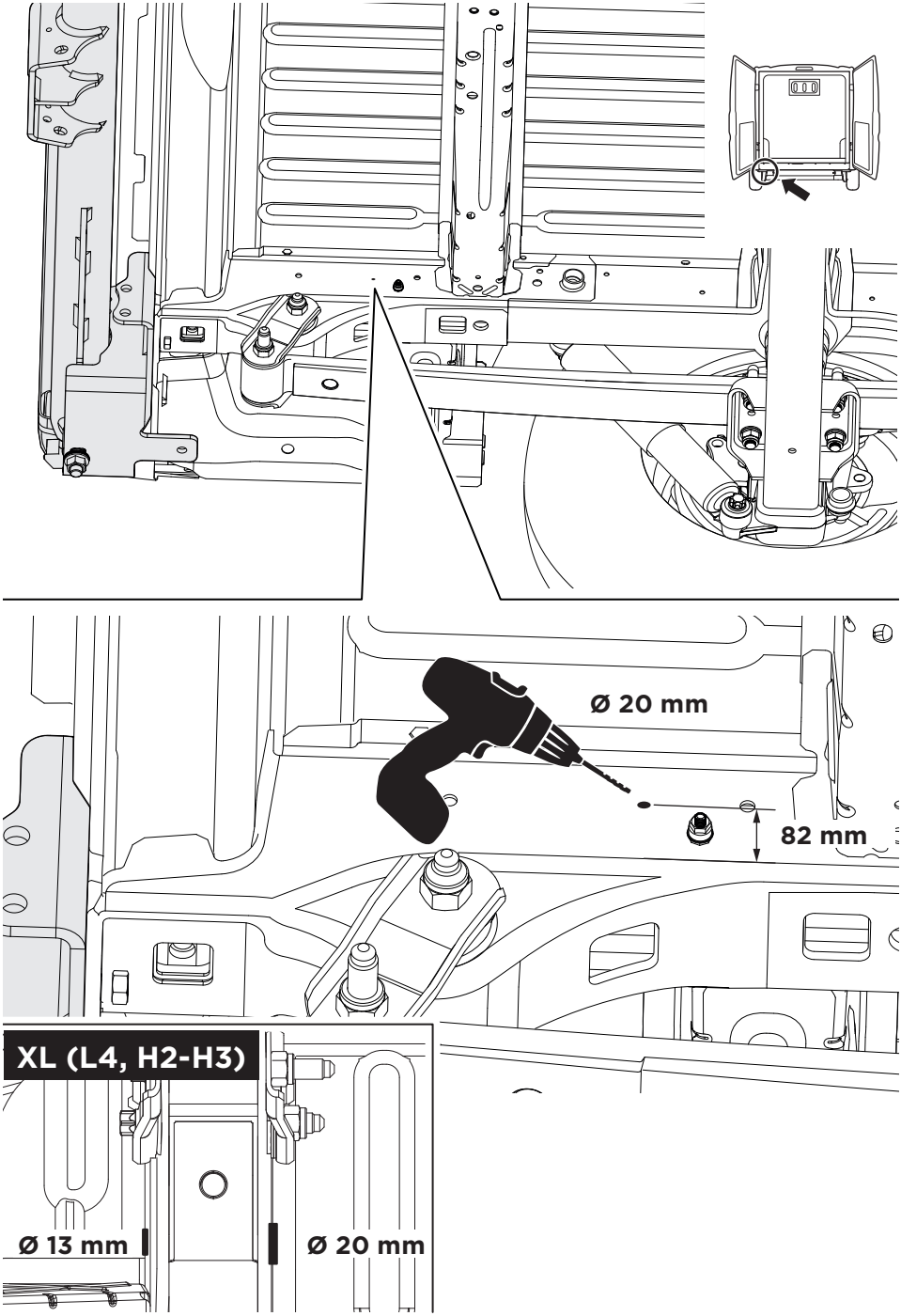

14

M12x140 mm
x1
M12
x1
x1
x2
M10x40 mm
x1
M10
x1
M10
x1
M12x45 mm
x4
M12
x3
M12
x1
x1
x1
N° 17
N° 18
N° 17
N° 18

A

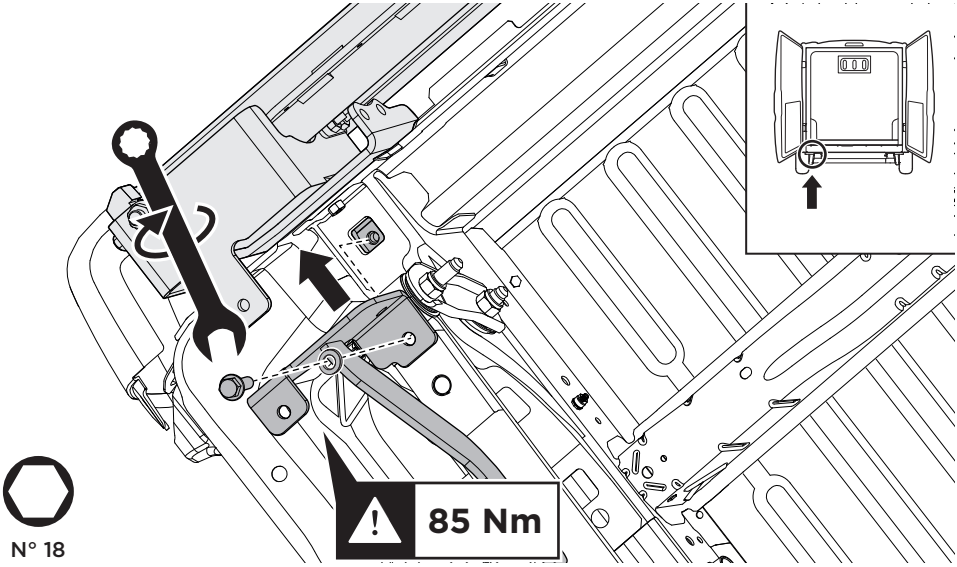
85 Nm
N° 18

B

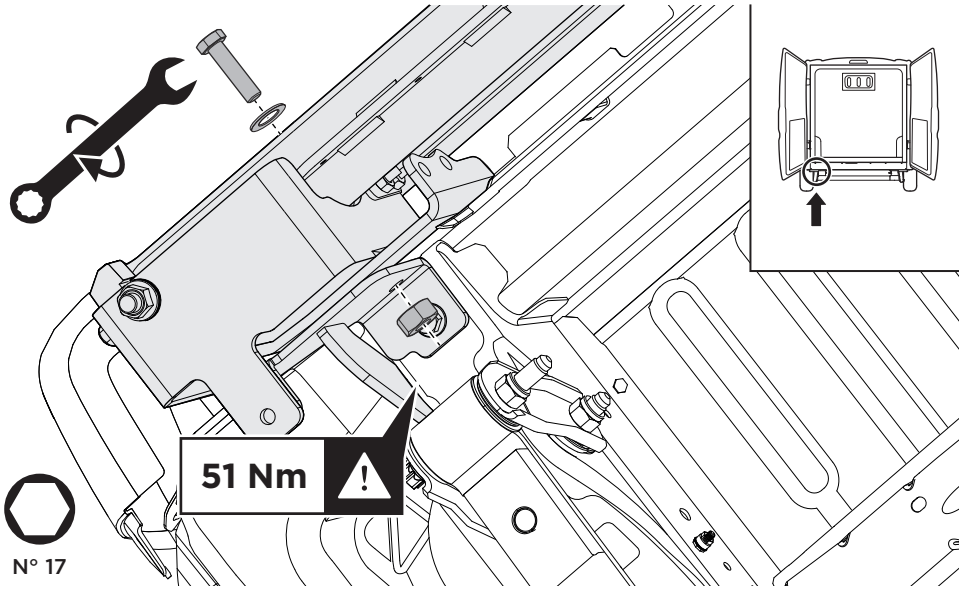
51 Nm
N° 17

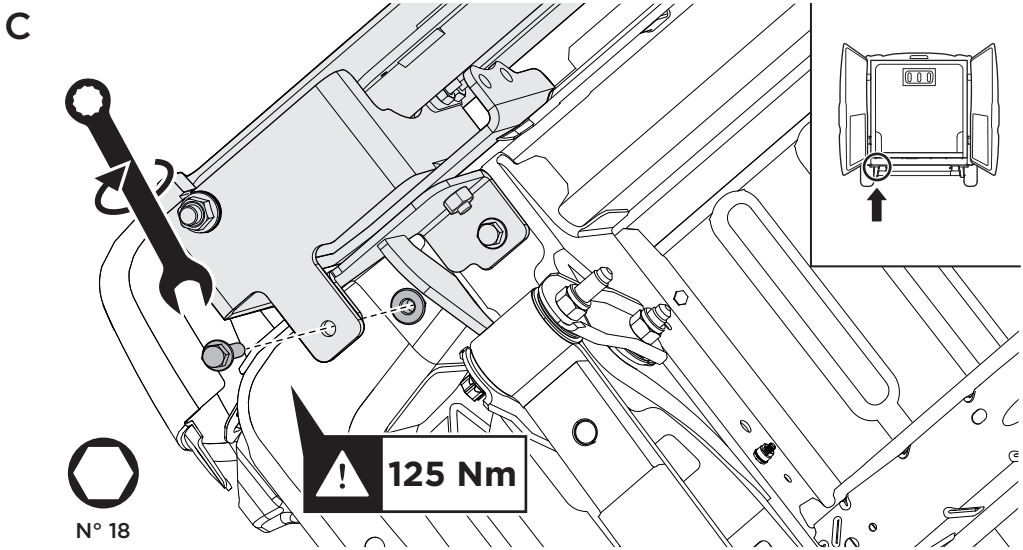
C
125 Nm
N° 18

D

L (L3, H2-H3)

N° 18

125 Nm

MAX.
85 Nm

N° 18

Ø 13 mm

Ø 13 mm

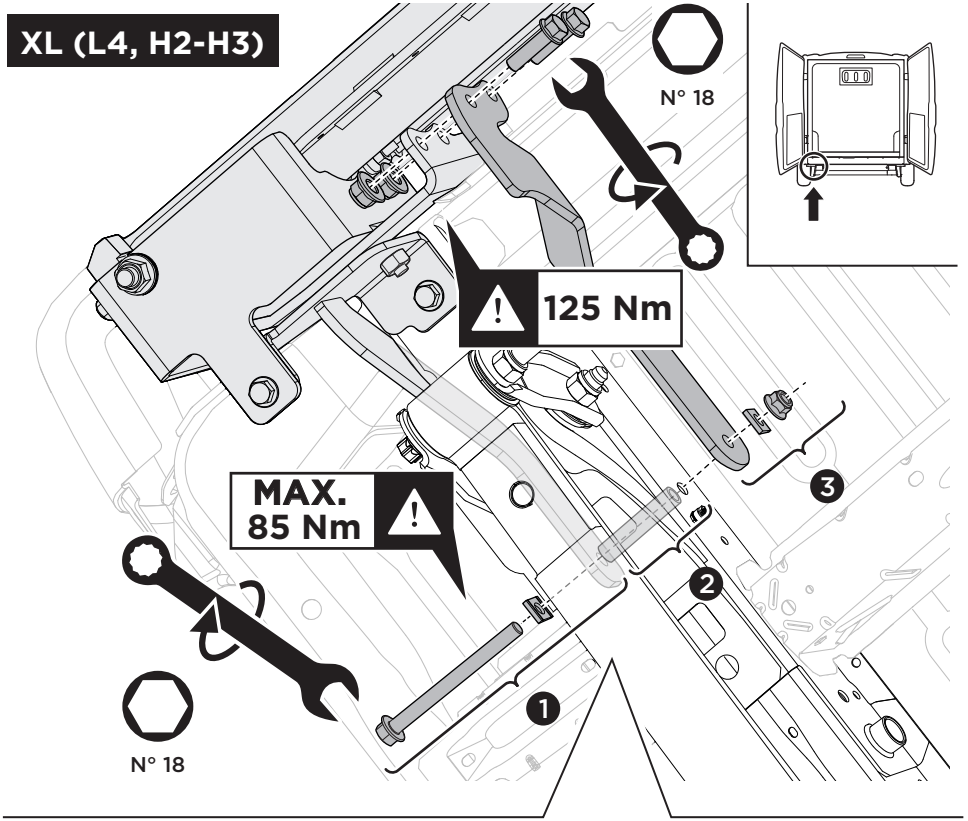
XL (L4, H2-H3)
N° 18
125 Nm
MAX.
85 Nm
N° 18
1
2
3

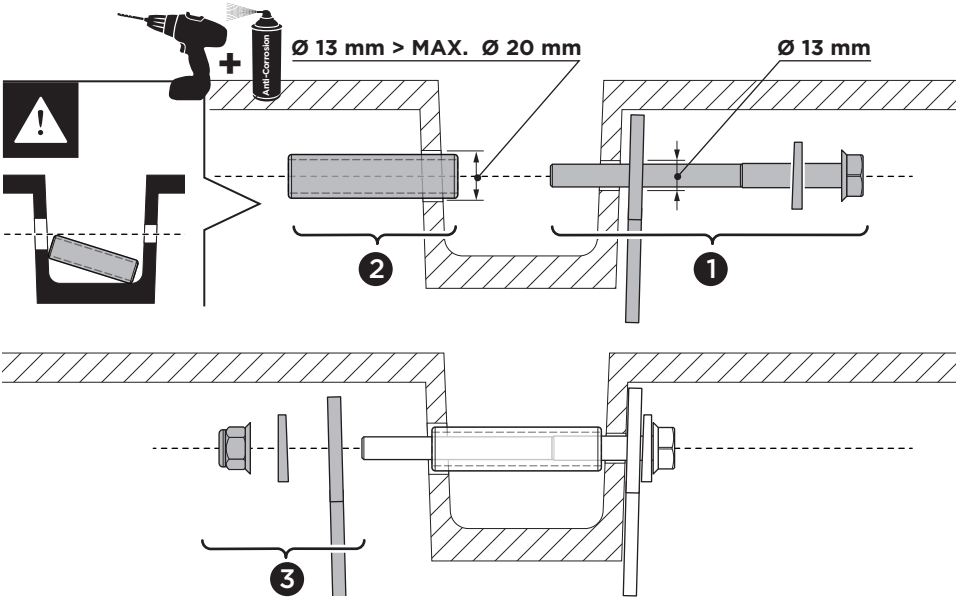
Anti-Corrosion
Ø 13 mm > MAX. Ø 20 mm
Ø 13 mm
2
1
3

15

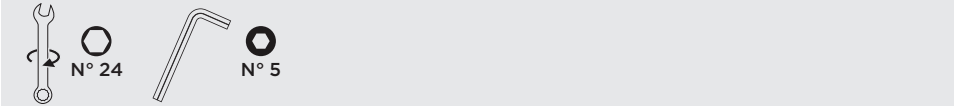

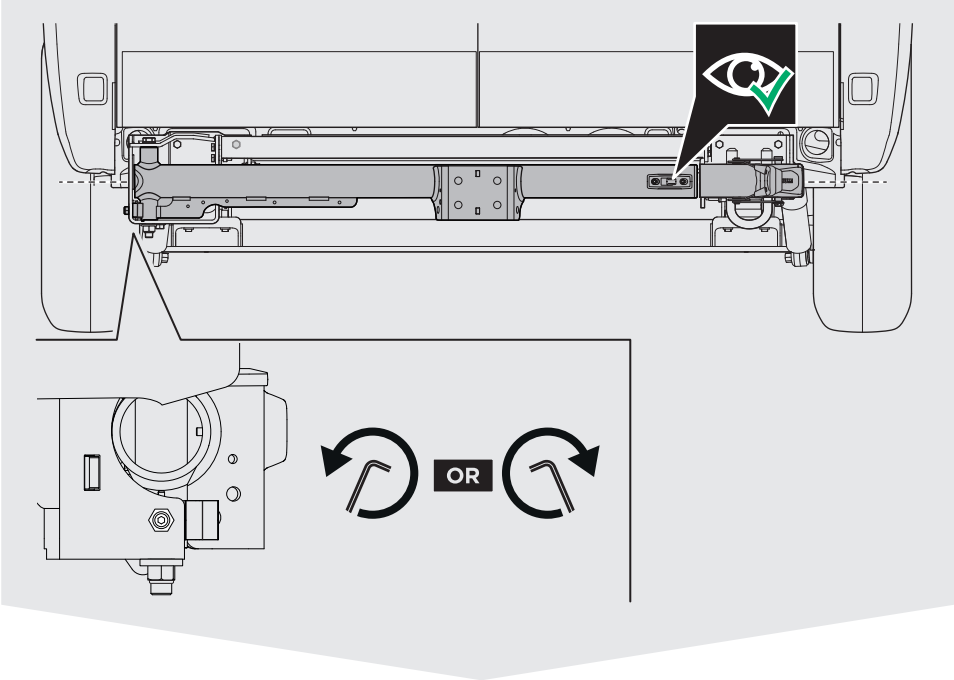

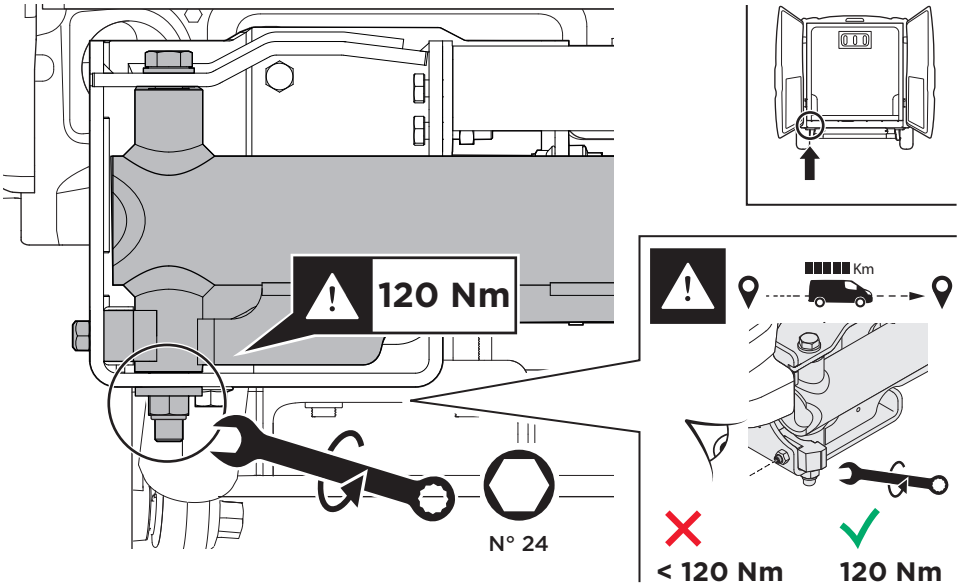

16

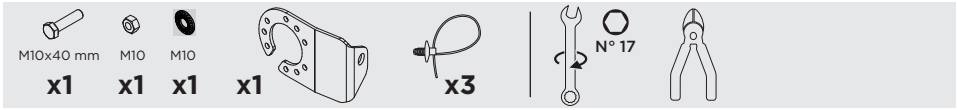

A

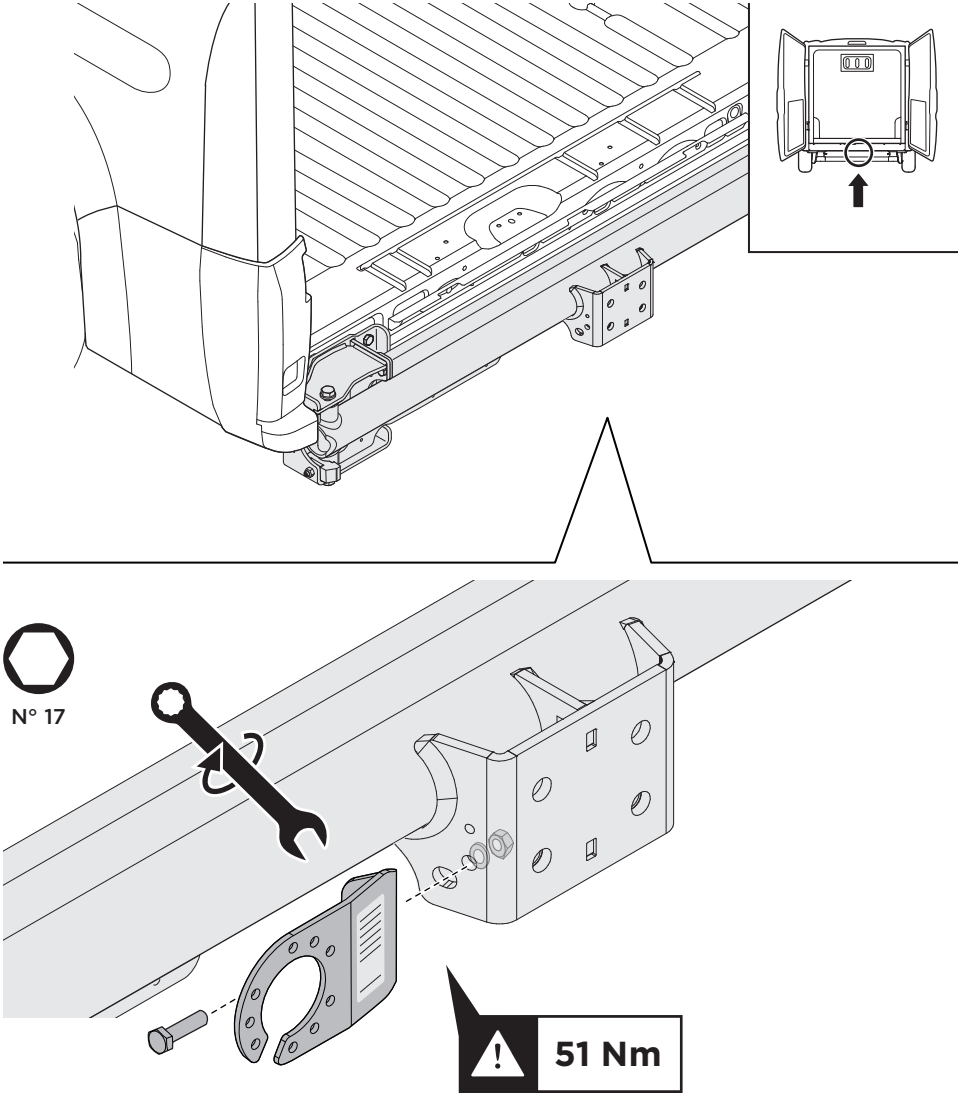

B

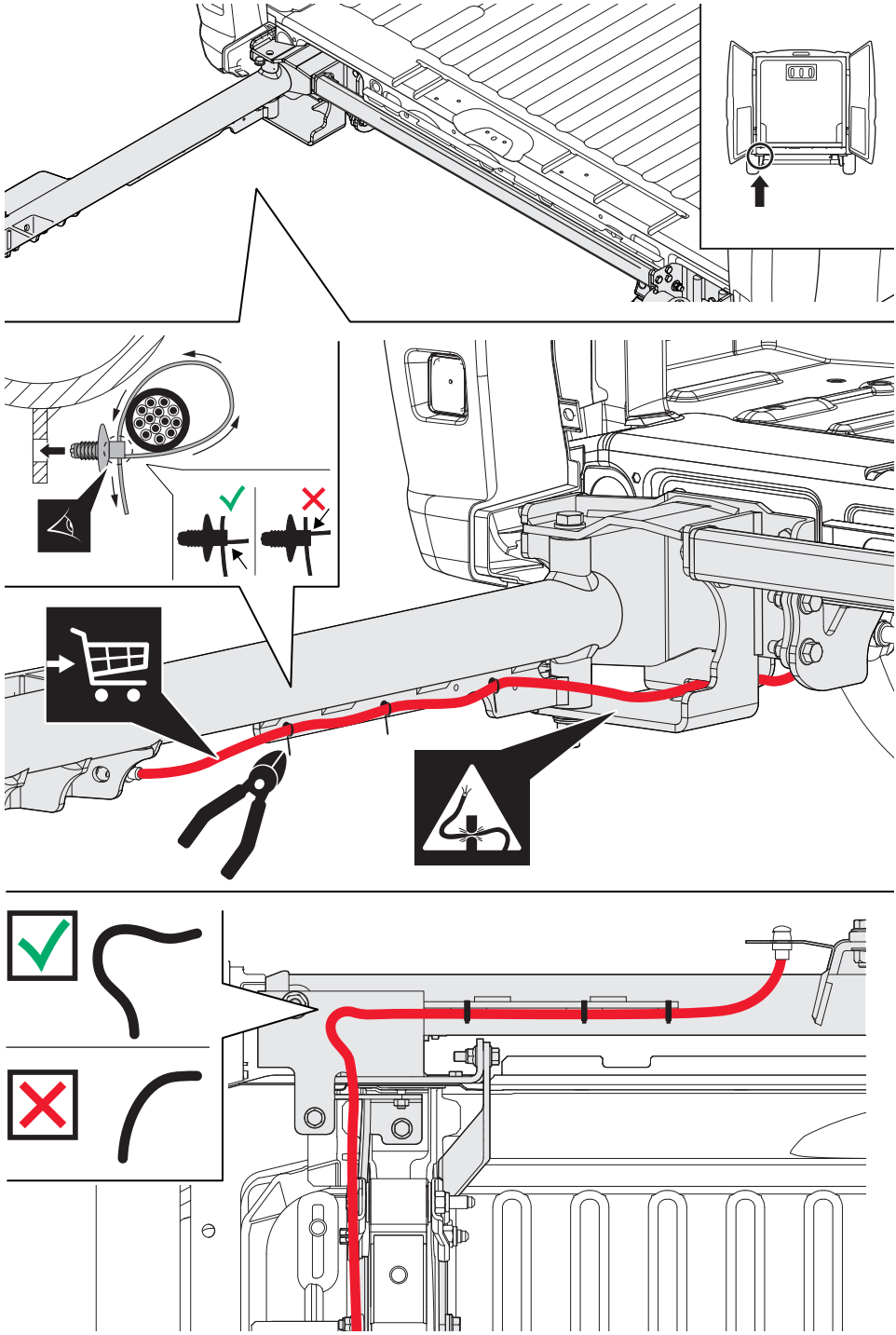

17

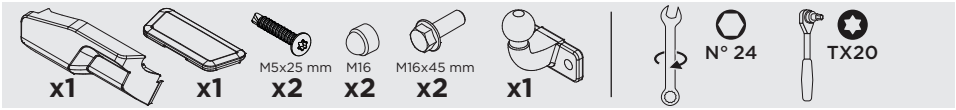

A

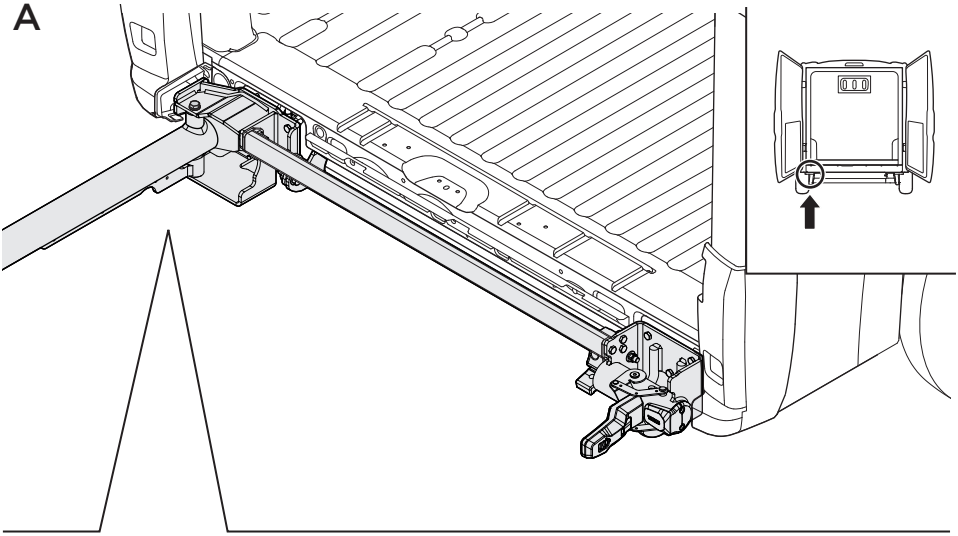

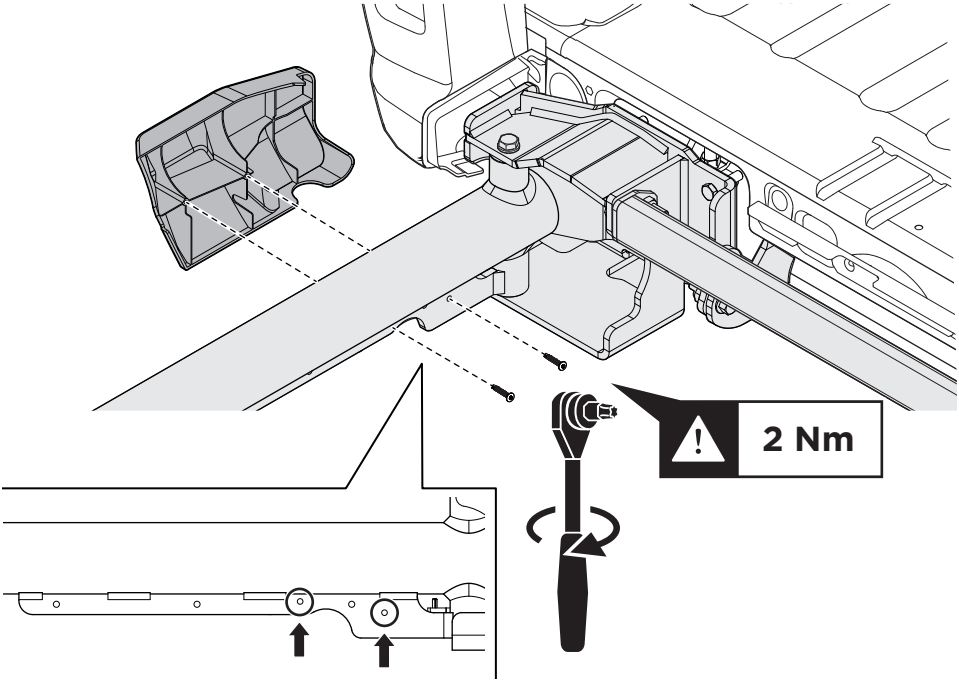

B

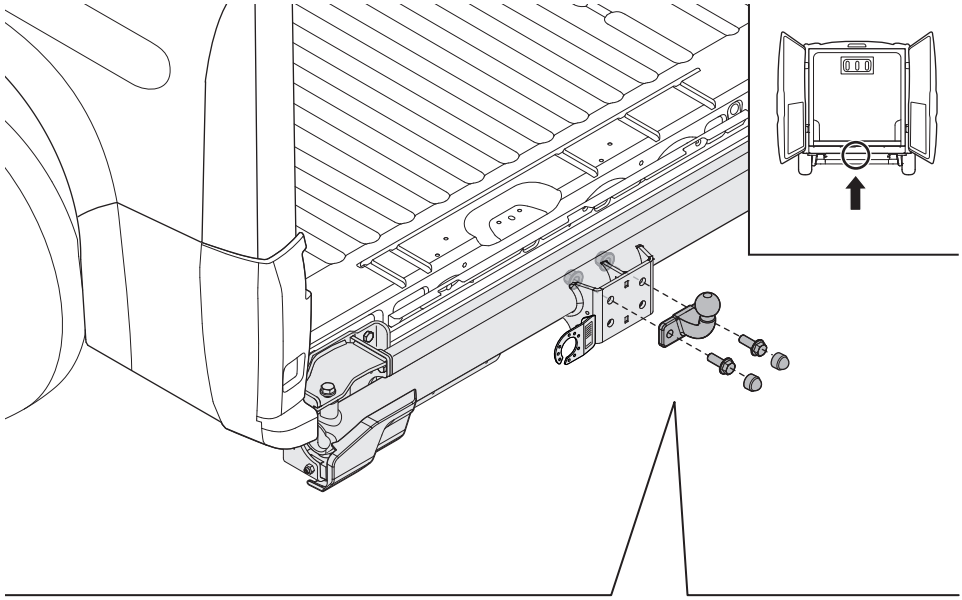

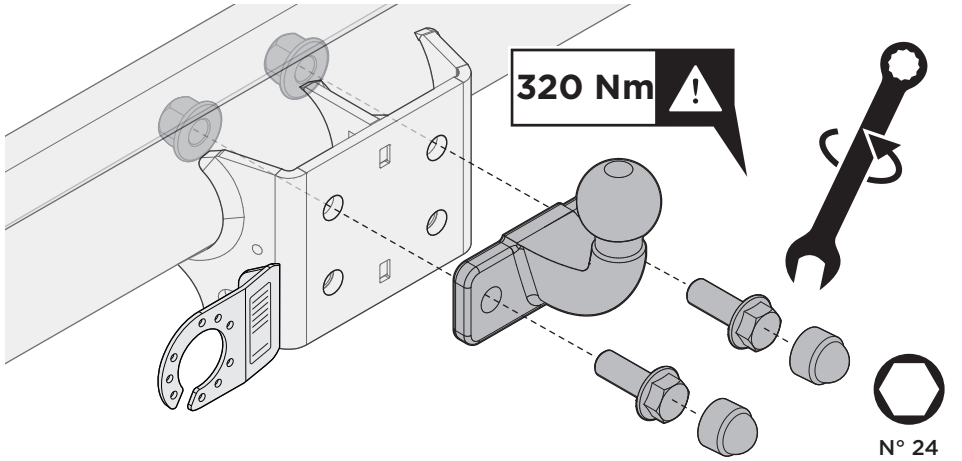

C

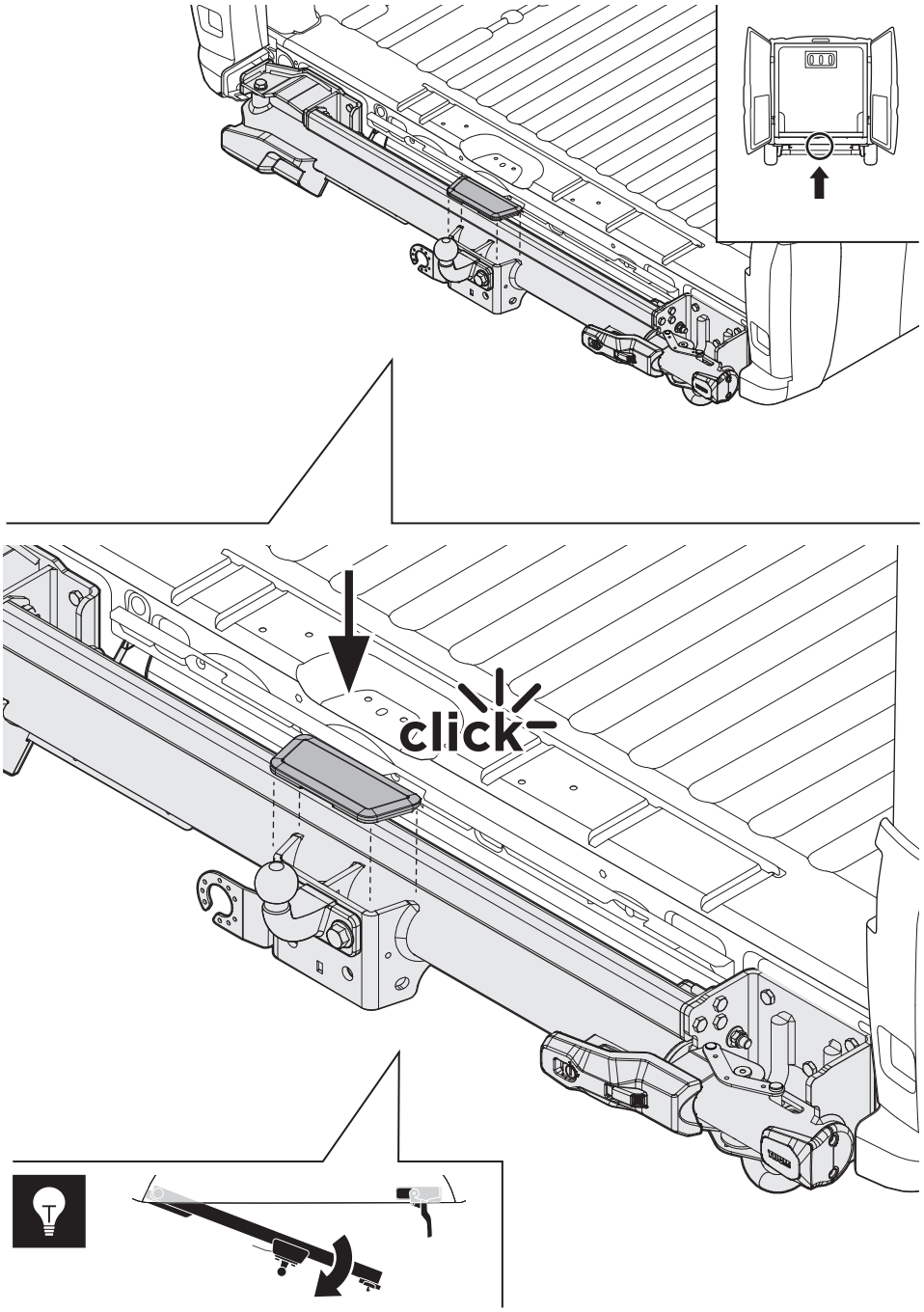

18

Pre-cut Bumper OR **DIY-cut Bumper**

P.78
18
A...

P.79
18
B...

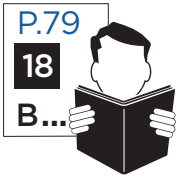

A **Pre-cut Bumper**

Pre-cut Bumper (without sensors) 302065 OR **Pre-cut Bumper (for sensors) 302066**

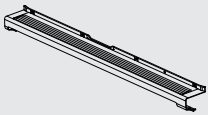

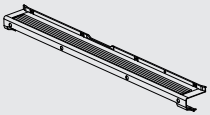

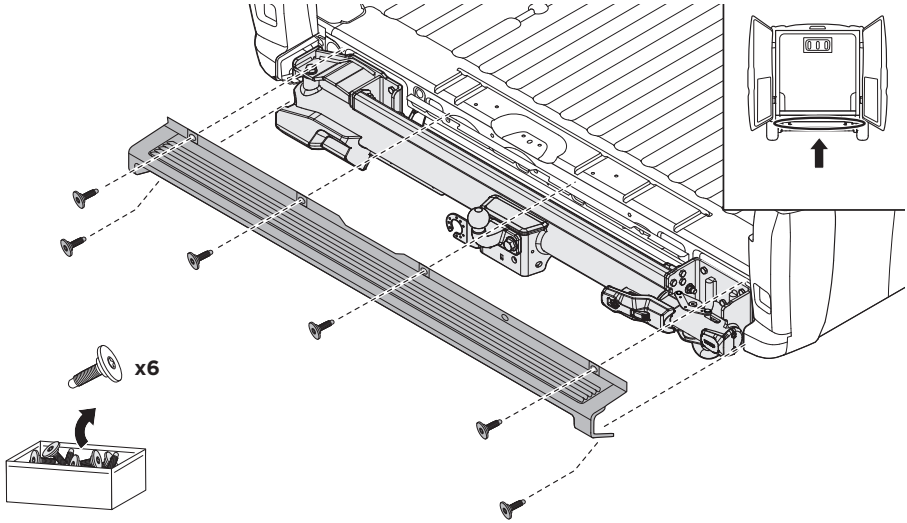

B DIY-cut Bumper

1

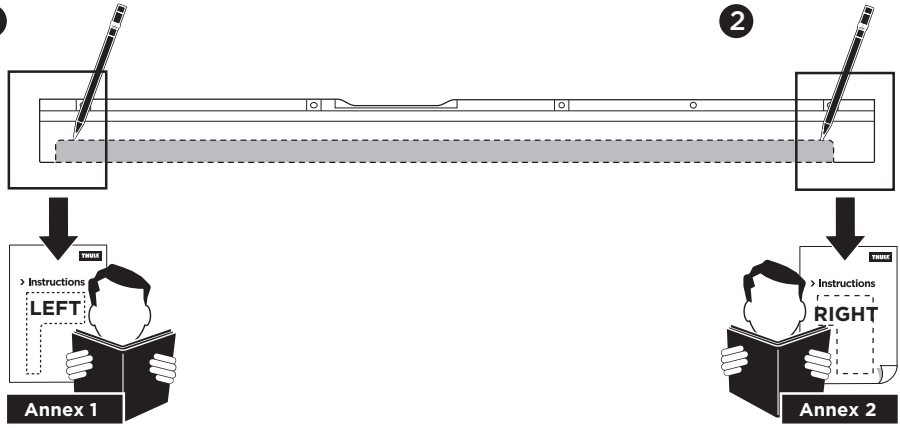

2

3

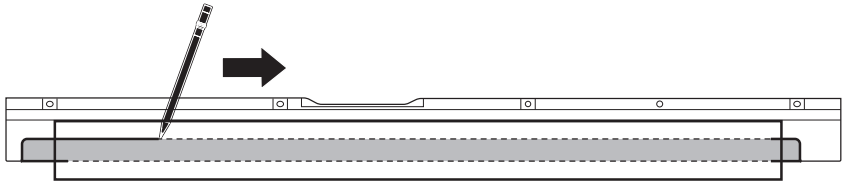

4

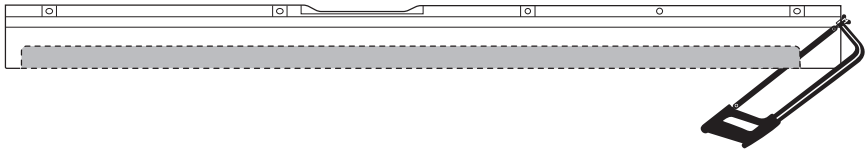

5

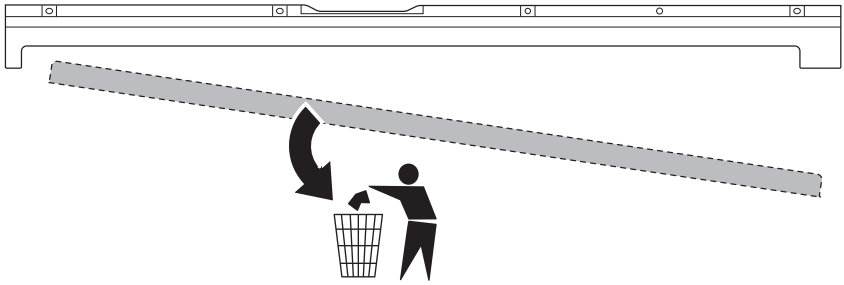

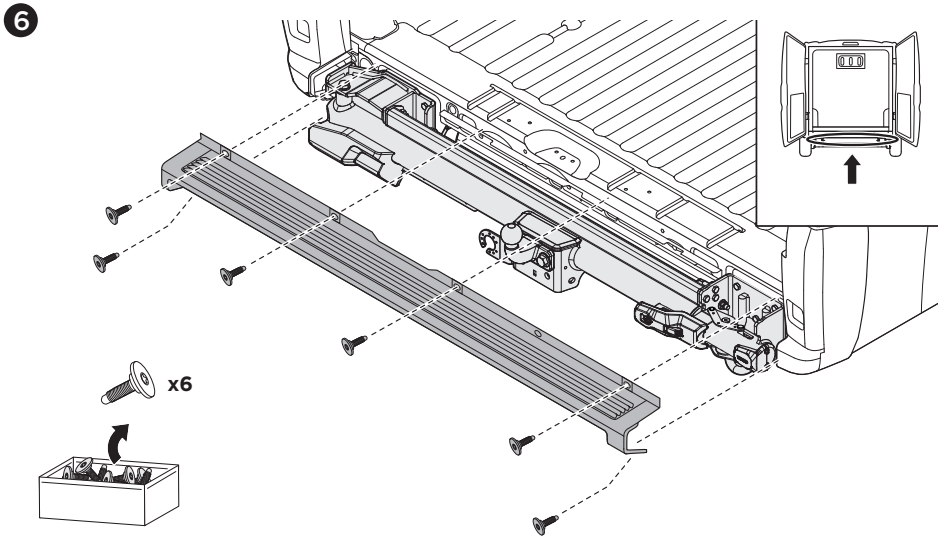
6
x6

19

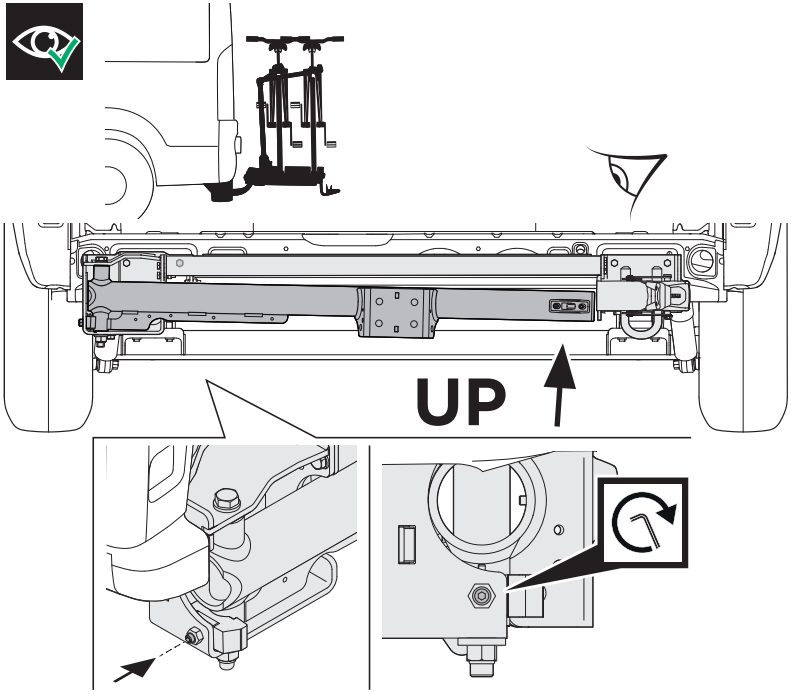

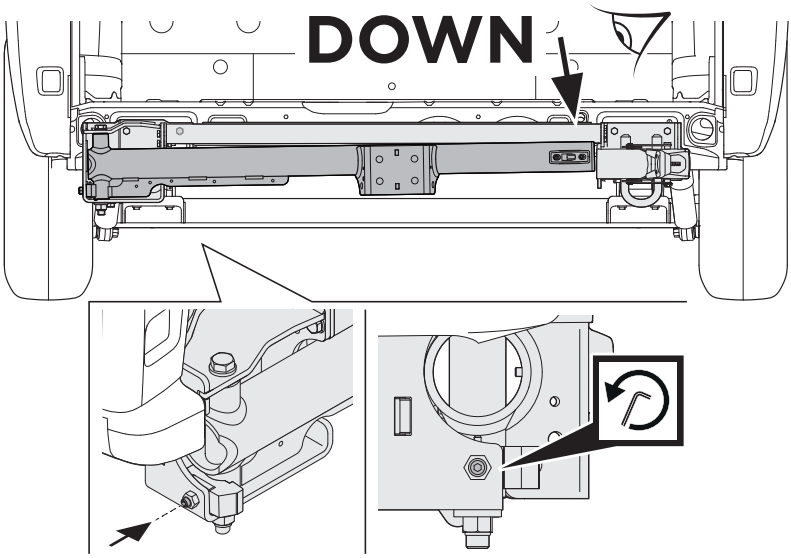

Thule VeloSwing - Installation video

Thule NV
Kortrijkstraat 343
8930 Menen, Belgium
support.thule.com/s/contactsupport
www.thule.com

© Thule Group 2025. All rights reserved.

PART OF THULE GROUP