Kit 187214

VOLVO EX60, 5-dr SUV, 27-

THIS KIT IS ONLY FOR VEHICLES WITH FIXPOINT MOUNTING.

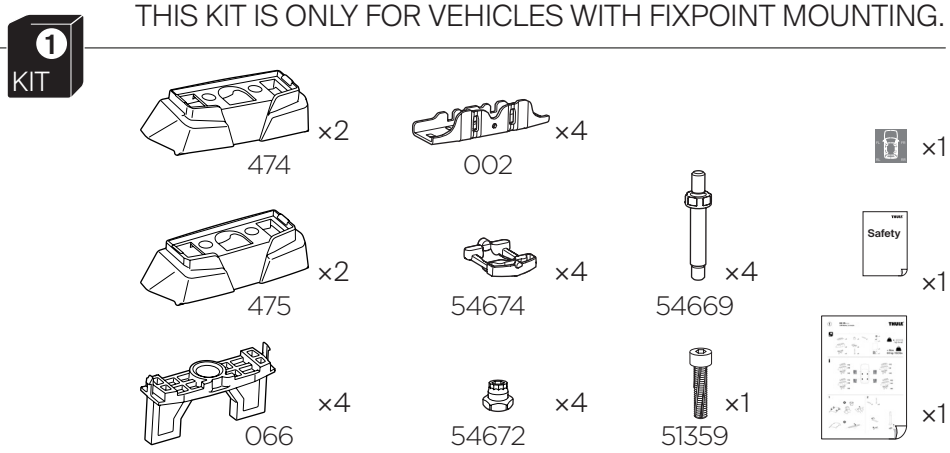

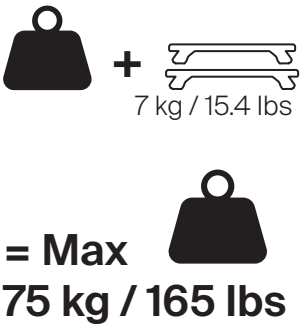

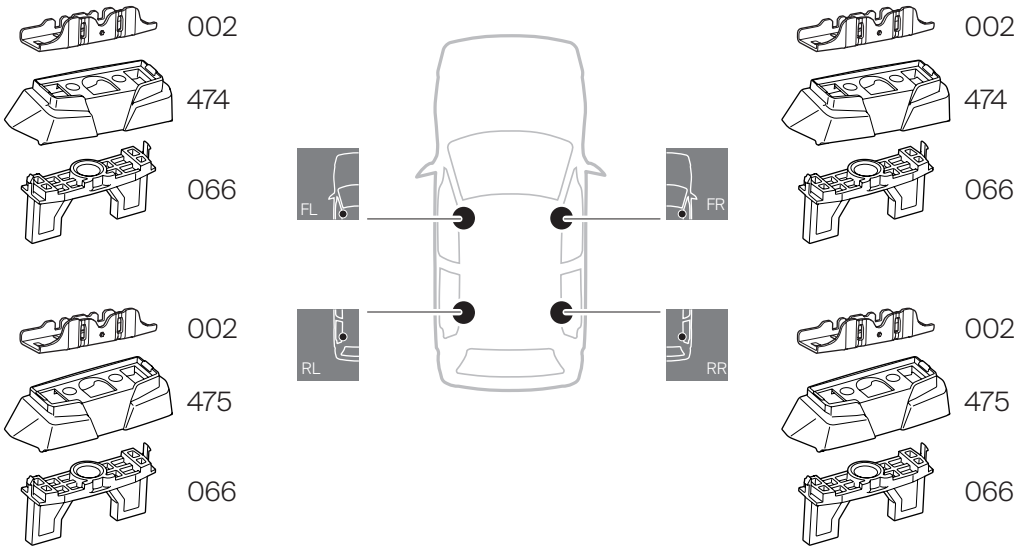

1

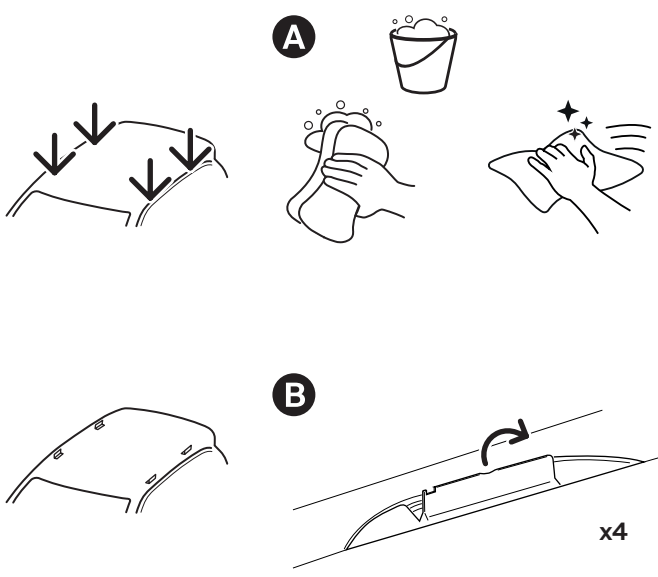

2

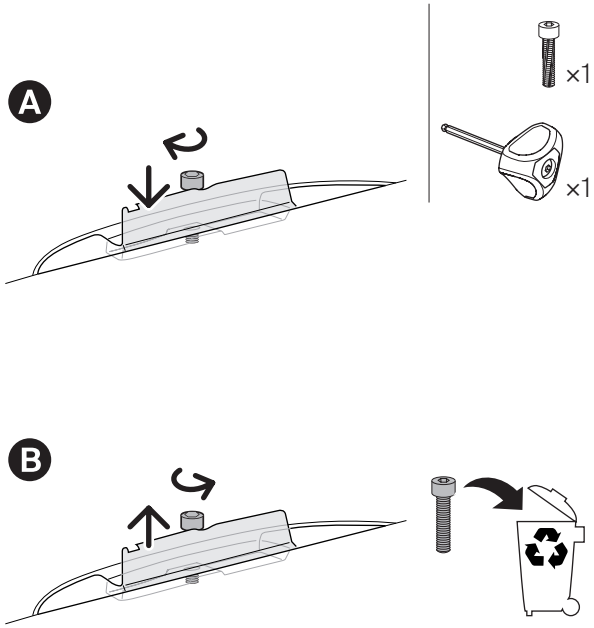

3

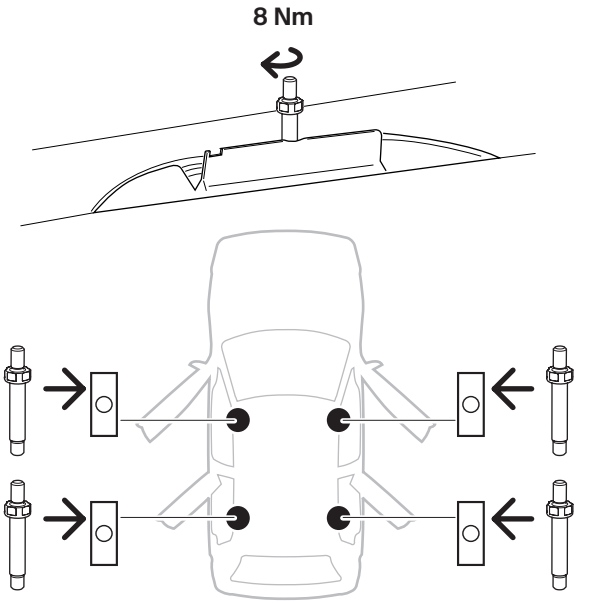

4

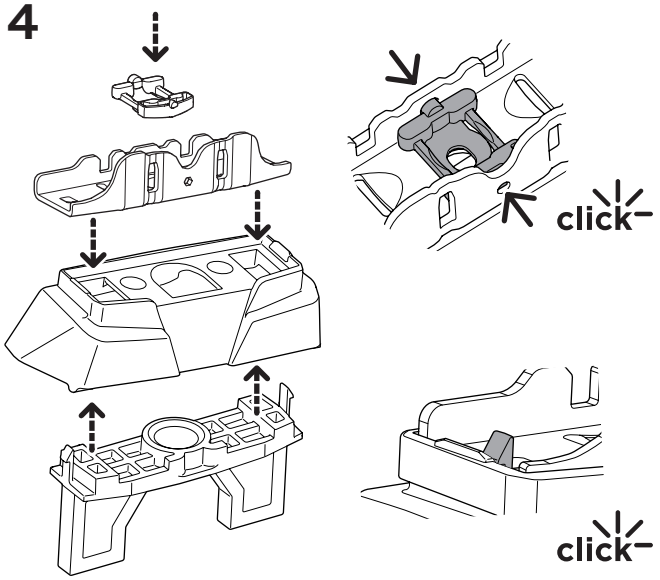

5

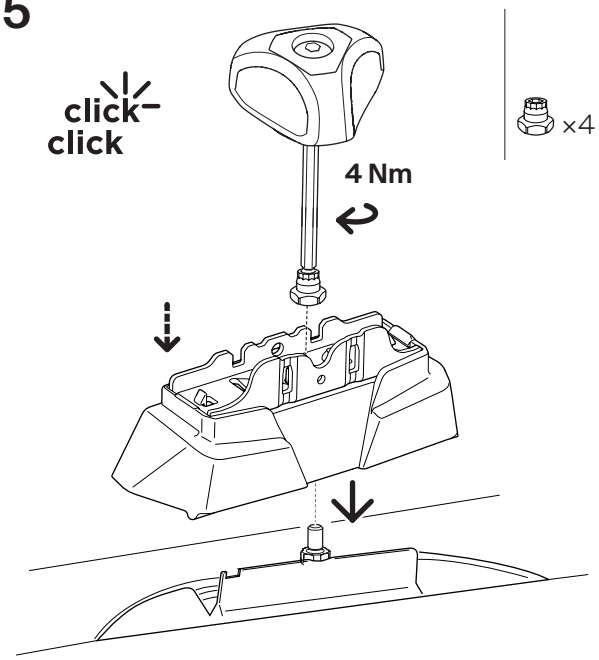

6

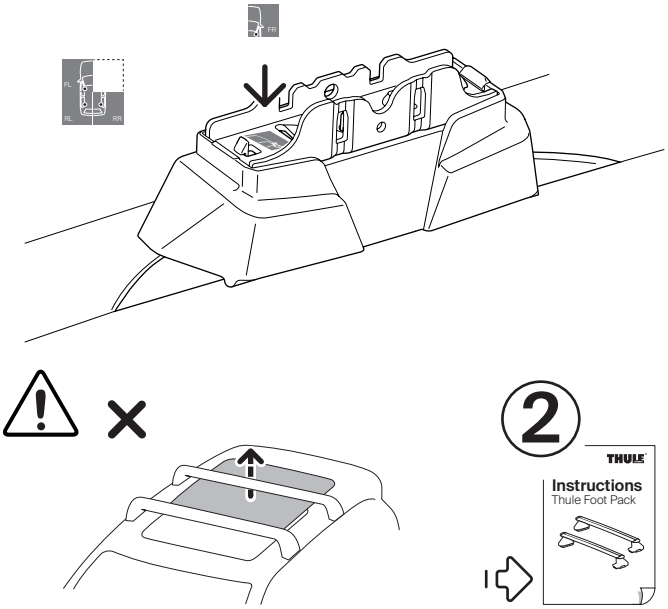

i

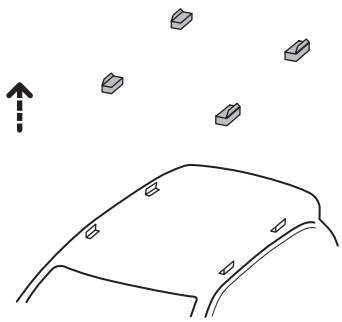

A

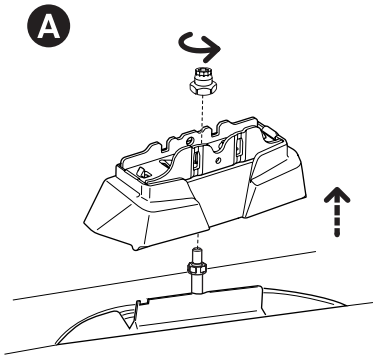

B

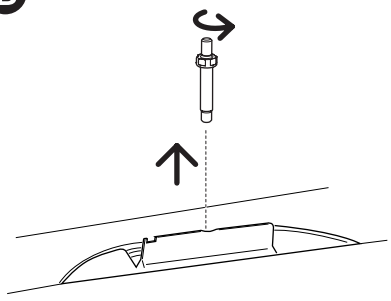

C

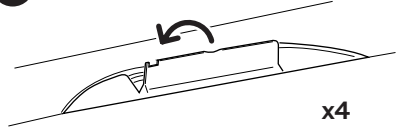

Thule Sweden AB
Borggatan 5, 335 73 Hillerstorp, Sweden
info@thule.com | www.thule.com

©**Thule.** All rights reserved.
5567795002 | 2026-10-26 #00